Company

Pneumatics is changing air that is wherever and infinitely available in the world to power energy. You might seldom see its actual applications, but currently pneumatic equipment are used in production and conveyer lines in almost all industries.

VPC company, which was founded in 1985, as a leading manufacturer, is dedicated to serve the automation and labor saving requirements with our pneumatic product range.

Above, coupled with close connection with customers' requirements, enables us to manufacture and make good valve, high quality products and to operate successfully around the world. As natural result of such policy VPC has been recognized to be in compliance with the requirements as provided for the quality system standard ISO9001:2000, as well as the CE Certificate, which is the first pneumatic enterprise who get both certificates in Ningbo, China.

VPC built an excellent sales team is taking advantage of a widespread net of local and foreign distributor constant expansion in the main worldwide strategic areas. We believe the diversity of our product line, and the sincere work of our staff will make VPC to be world class performance leaders of pneumatic products.

Sincere Service
Good Quality



INDEX

Pneumatic Cylinder



Technical Data 1.....002
DNC Series ISO6431 Standard Cylinder.....003
SI Series ISO6431 Standard Cylinder.....005
DNC/SI ISO6431 Standard Cylinder Brackets.....007
SC/SU Series Standard Cylinder.....010
SC/SU Series Standard Cylinder Brackets.....012
MB Series Standard Cylinder.....014



Technical Data 2.....015
MAL Series MINI Cylinder.....016
MA Series MINI Cylinder.....020
MAL/MA Series MINI Cylinder Brackets.....022
MI Series MINI Cylinder.....024
CJ2B Series MINI Cylinder.....026
CDM2B Series MINI Cylinder.....026



Technical Data 3.....027
SDA Series Compact Cylinder.....028
CQ2 Series Compact Cylinder.....035
ADVU Series Compact Cylinder.....038

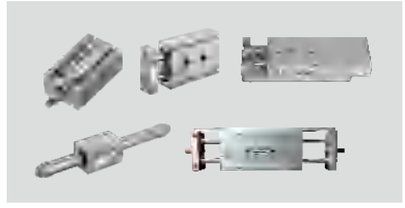

CU Series Free Installation Cylinder.....040
TN Series Double-shaft Cylinder.....042
CXS Series Double-shaft Cylinder.....044
STM Series Slide Cylinder.....046
MXS Series Slide Cylinder.....049
CY1 Series Rodless Cylinder.....049



CXSW Series Dou-shaft Cylinder.....050
CJP Series Needle Cylinder.....050
MSQ Series Rotary Table,Rack&Pinion Cylinder.....051
RSQ Series Stopper Cylinder.....051
MGP Series Three-shaft Cylinder.....052



MHZ Series Style Air Cylinder.....052
MHL Series Style Wide Openning Air Cylinder.....053
MHT Series Angle Style Air Cylinder Toggle Type.....053
Special Cylinder.....054
Cylinder Assembly Kits.....055
Magnetic Switches.....056

INDEX

Directional Valve



Technical Data4.....058
2V1 Series Solenoid Valve.....059
3V1 Series Solenoid Valve.....060
3V Series Solenoid Valve.....061
4S Series Solenoid Valve.....064
4V Series Solenoid Valve.....068



V Series Manifold.....128
VSV Series 10mm Micro Solenoid Valve.....129
VSV Series 10mm Micro Solenoid Valve Combination.....130
VSV Series 15mm Micro Solenoid Valve.....131
VSV Series 15mm Micro Solenoid Valve Combination.....132



SY Series Solenoid Valve.....079
SY Series Manifold.....082
VF Series Solenoid Valve.....083
3M Series Solenoid Valve.....085
4M Series Solenoid Valve.....087



3A Series Air Control Valve.....089
4A Series Air Control Valve.....092
L Series Hand Pull Valve.....098
H Series Hand Push Valve.....100
M Series Mechanical Valve.....102



4HV Series Rotary Valve.....104
HV Series Rotary Valve.....105
F Series Foot Pedal Valve.....107
ASC Series One-Way Throttle Valve.....109
AS Series Big Flow Control Valve.....110



Flow Control Valve.....111
Shuttle Valve.....112
Slide Valve.....112
One Way Valve.....113
Quick Exhausting Valve.....114

Solenoid Valve



Technical Data 5 (Valve body seal material selection list).....116
Technical Data 6.....117
Technical Data 7.....118
SLP Series Valve (Normal Close).....119
SLP Series Valve (Normal Open).....122
ZS Series Solenoid Valve (Normal Close).....124
ZS Series Valve (Normal Open).....126



VPC Series Direct Acting Solenoid Valve.....128
VPC Series Compact Solenoid Valve.....129
VPC Series Pilot-Diaphragm Solenoid Valve (Normal Close).....130
VPCE Series High Pressure Solenoid Valve.....131
VPCT Series High Temperature Solenoid Valve.....132



VPC Series Step Direct Acting Diaphragm Solenoid Valve.....133
VPCS Series Stainless Steel Pilot-Diaphragm Solenoid Valve.....134
PU220 Series Solenoid Valve.....135
PU225 Series Solenoid Valve.....136



2W Series Solenoid Valve.....137
2L Series Solenoid Valve.....139
2S Series Stainless Steel Solenoid Valve.....140
2P Series Solenoid Valve.....141
2V Series Solenoid Valve.....142



2Q Series Solenoid Valve.....143
VX Series Solenoid Valve.....144
SLH Series High Temperature Stainless Steel Solenoid Valve.....145
SLDF Series Special For Under-Water Solenoid Valve.....146
VPC Series Angle Valve (Full Stainless Steel).....147
VPCP Series Angle Valve (Plastic Actuator).....149



VPCF Series Electro-Magnetic Valve.....151
VPCYF Series Electro-Magnetic Valve.....152
Armature+Connector+Coil.....153
Air Suspension Valve Block.....154
VAT Series Pneumatic Actuators.....155

INDEX

Air Treatment Units（FRL）



Air Treatment Unit Tips.....158
OU Series Air Treatment Units.....159
OFR Series Air Treatment Units.....161
OF Series Air Treatment Units.....163



OL Series Air Treatment Units.....165
OR Series Air Treatment Units.....167
ORB Series Pressuere Regulator Combinations.....169
O Series Acessories.....170



AC Series F.R.L Combination.....171
AC Series F.R.L Combination.....173
AW Series F.R. Combination.....175
AF Series Air Filter.....177

AL Series Lubricator.....179
AR Series Air Regulation.....181
A Series F.R.L Accessories.....183



V Series F.R.L With Embedded Air Gauge.....185
A/B Series Air Treatment Unit.....186

INDEX

Pneumatic Accessories

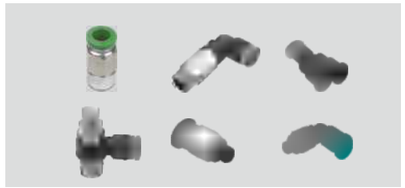

One Touch-In Fitting.....188
One Touch-In Fitting With O-Ring.....194
Hand Valve.....196
MINI Type One Touch-In Fitting.....197



Stop Fitting.....198
Check Valve.....198
KQ Series One Touch-In Fitting.....199
Brass One Touch-in Fitting.....202



Stainless Steel Fitting.....203
VPC Series Pipe Fitting.....204
Silencer.....205

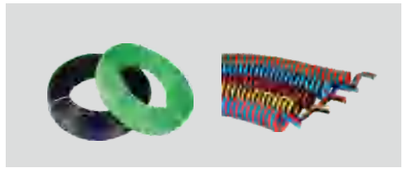

PU Tube(Polyester Polyurethane).....206
PUC Coiling Tube(Polyester Polyurethane).....207
PUCL Twin(Multi-row)Spiral Hose.....208
PUS Twin(Multi-row)Hose,Bundle Hose.....209
EU Tube(Ether-Based Polyurethane,Food Grade).....210



EUC Coiling Tube(Ether).....211
PBH Braided Tube(Ester)/Yarn Tube.....212
PUH Anti-Spark Hose.....213
PA Nylon Tube.....214



PAC Coiling Tube.....215
PE Tube.....216
FEP Tube.....217
Sectional Tube.....218
Pressure Switch.....219

Measure Conversion Table

Linear Measure

1in	=25. 4	mm
1ft	=0. 3048	m
1mile	=1609. 3	m

Weight Measure

1lb	=453. 6	g
1cwt	=50. 8	Kg
1UK ton	=1016	Kg
1US ton	=907. 2	Kg
1ton	=1000	Kg

Torsion Measure

1 in lb	=0. 113	Nm
1 ft lb	=1. 356	Nm
1 kgm	=9. 807	Nm

Temperature Measure

(°F-32) X5/9	=	°C
K-273. 15	=	°C

Capacity Measure

1 Litre	=0. 001	m^3
1 cu ft	=0. 0283	m^3
1 cu in	=16. 39	cm^3
1 US gal	=4. 546	L
1 UK gal	=3. 79	L

Equivalent Exchange

1psi	=6. 895Kpa=0. 07Kg/cm	=0. 06895bar=0. 0703atm	
1sta atm=14. 7psi=101. 3Kpa		=1. 01325bar	
1Kg/cm^2=98. 07Kpa=14. 22psi		=28. 96ins mercury	
1ft lb	=0. 13826kgm	=1. 356Nm	
1L	=1000cm^3	=1. 7598pint	=10^6 mm^3
1tonne	=1000kg	=0. 984ton	=2205lb
1m^3	=10^6 cm^3		
1Pa	=1N/m^2		
1cu ft/min.	=0. 0283m^3 /min	=28. 3l/min	

Area Measure

1 in^2	=6. 45	cm^2
1 ft^2	=0. 0929	m^2

Pressure Measure

1 psi	=6. 89	Kpa
1 Kgf/cm^2	=98.07	Kpa
1 bar	=100	Kpa
1 bar	=14.5	psi
1 atm	=101.3	Kpa
1 cm water	=97.89	pa
1 in water	=248.64	pa
1 mm mercury	=133.3	pa
1 in mercury	=3.39	Kpa
1 torr	=133.3	pa
1 ft water	=0.0298	bar
1 bar	=33.3	ft water

Energy&Heat Measure

1 lb ft	=1. 356	J
1 N m	=1	J
1 Kgf m	=9. 807	J
1 Kw h	=3. 6	MJ

Force Measure

1 lbf	=4. 45	N
1 Kgf	=9. 81	N
1Kilopond(K P)	=9. 81	N
1 ton force	=9. 81	KN

Power Measure

1 lb ft/sec	=4. 358	W
1 Kgf m/sec	=9. 807	W
1 N m/sec	=1	W
1 Joule/sec	=1	W
1 H. P. (IMP)	=745. 7	W

IS09001 CE
VPC PNEUMATIC®

Cylinder

User Manual

1. Before screwing the correct fitting in, make sure the thread ports and fittings are clean. Be aware of dust or fitting tap falling into the cylinder;
2. It is suggested to use the medium lubricated by 40um filter element;
3. Under the high-temperature environment, use the high-temperature type cylinder. Under the low-temperature environment, take measure to avoid frozen;
4. In order to prevent damaging the cylinder, test the cylinder with loading first and adjust the cushion tightly.
5. In order for the cylinder to achieve long service life, do not side-load cylinder,
6. If the fittings were removed from the cylinder for a period of time, be sure to block the thread port with protecting cap to keep the dust away.

Caution

1. To remove the rust, external impurity and water, please install a filter near to the directional valve.
2. Please use galvanized pipe, nylon tube, rubber pipe etc corrosion resistant pipe materials.
3. For the piping between the cylinder and the directional control valve, please confirm section have effective cross-sectional area of the provisions of the velocity of the piston must be.
4. Piping before the removal of external impurity in the tube, chip etc. Please use compressed air to clean.
5. When connected with the component products, please do not mix with the sealing belt and other foreign bodies.
6. And in poor rod load please keep in axial state.

Maintenance

1. The most suitable temperature for the use of the cylinder is 5-60℃, when the temperature exceeds 60℃, please consider to change the material of the seal ; if the temperature is below 5℃, due to the freezing of water in the loop, there may become an accident, please consider to prevent freezing.
2. Please don't use cylinder corrosion environment , otherwise they will be damaged or dysfunctional if must be used in such an environment, please consuit with VPC for solution.
3. Compressed air used must be clean and less water.
4. The purpose of the buffer is to use the energy of the air to absorb the kinetic energy of the moving parts, so that the piston and the end cover are not impacted at the end of the stroke.
5. Pneumatic buffer at the factory has been adjusted. Due to the variation of load to adjust the buffer can slowly rotate to the right needle, counterclockwise is weakened.
6. Please do not use the cylinder directly to the cutting fluid, cooling environment, please add the dust cover on the cylinder.

Tips

1. Cylinder can be caused by using the cylinder in the large inertia of the super-permitted range.
2. Please do not beat the cylinder, resulting in injuries, which well cause the cause of bad action.
3. Please install in the horizontal plane, if the installation surface is nueven, may cause the cylinder is bamaged.
4. Attention to the inertia force due to external forces, and sometimes lead to negative pressure in the cylinder, so that the cylinder seal off, causing the external leakage.



IS09001 CE
VPC PNEUMATIC®

Technical Data 1

Cylinder Peripheral Component

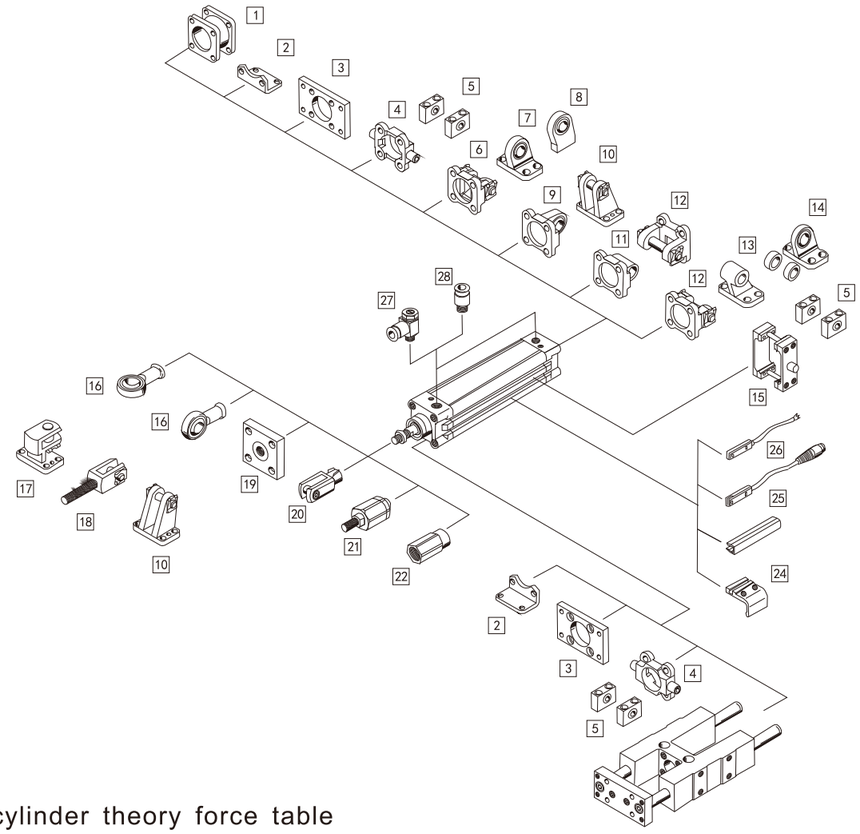

Air cylinder theory force table

Bore (mm)	OD of rod (mm)	Acting type		Actual working area(mm^2)	Working pressure(Mpa)								
					0.1	0.2	0.3	0.4	0.5	0.6	0.7	0.8	0.9
32	12	Double acting	Push force	804	80.4	160.8	241.2	321.6	402.0	482.4	562.8	643.2	723.6
			Pull force	690	69.0	138.0	207.0	276.0	345.0	414.0	483.0	552.0	621.0
40	16	Double acting	Push force	1256	125.6	251.2	376.8	502.4	628.0	753.6	879.2	1002.4	1130.4
			Pull force	1055	105.5	211.0	316.5	422.0	527.5	633.0	738.5	844.0	949.5
50	20	Double acting	Push force	1963	196.3	392.6	588.9	785.2	981.5	1177.8	1374.1	1570.4	1766.7
			Pull force	1649	164.9	329.8	494.7	659.6	824.5	989.4	1154.3	1399.2	1484.1
63	20	Double acting	Push force	3117	311.7	623.4	935.1	1246.8	1558.5	1870.2	2181.9	2493.6	2805.3
			Pull force	2803	280.3	560.6	840.9	1121.2	1401.5	1681.8	1962.1	2242.4	2522.7
80	25	Double acting	Push force	5026	502.6	1005.2	1507.8	2010.4	2513.0	3015.6	3518.2	4020.8	4523.4
			Pull force	4536	453.6	907.2	1360.8	1814.4	2268.0	2721.6	3175.2	3628.8	4082.4
100	25	Double acting	Push force	7853	785.3	1570.6	2355.9	3141.2	3926.5	4711.8	4288.2	6282.4	7067.7
			Pull force	7362	736.2	1472.4	2208.6	2948.6	3681.0	4417.2	5153.4	5889.6	6625.8
125	32	Double acting	Push force	12272	1227.2	2454.4	3681.6	4908.8	6136.0	7363.2	8590.4	9817.6	11044.8
			Pull force	11468	1146.8	2293.6	3440.4	4587.2	5734.0	6880.8	8027.6	9174.4	10321.2
160	40	Double acting	Push force	20106	2010.6	4021.2	6031.8	8042.4	10053.0	12063.6	14074.2	16084.8	18095.4
			Pull force	18849	1884.9	3769.8	5654.7	7539.6	9424.5	11309.4	13194.3	15079.2	16964.1
200	40	Double acting	Push force	31416	3141.6	6283.2	9424.8	12566.4	15708.0	18849.6	21991.2	25132.8	28274.4
			Pull force	30157	3015.7	6031.4	9047.1	12062.8	15078.5	18094.2	21109.9	24125.6	27141.3

DNC Series ISO6431 Standard Cylinder





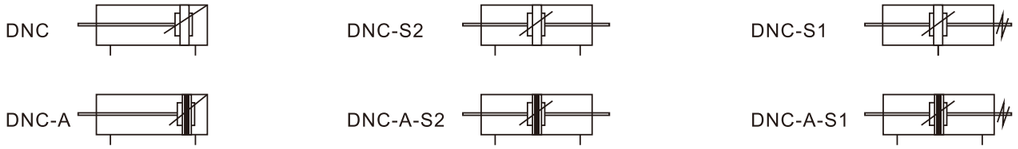

Ordering Code

DNC Series ISO6431 Standard Cylinder

DNC 32 X 50 - 20 - PPV - A - S2

- DNC — Series Code
  - DNC:Basic type
  - FNC:Front Rear Plate Mounting
  - ZNCF:Centre Trunnion Mounting
  - SNCB:Single Trunnion Mounting
  - SNCL:Double Trunnion Mounting
- 32 — Bore
- 50 — Stroke
- 20 — Adjustable Stroke
  - 10:10mm
  - 20:20mm
  - 30:30mm
  - 40:40mm
  - 50:50mm
  - 75:75mm
  - 100:100mm
- PPV — Cushion
  - Blank:No Cushion
  - PPV:With Cushion
- A — Magnet
  - Blan:Without Magnet
  - A:With Magnet
- S2 — Type
  - Blank:Standard Cylinder
  - S1:Double-shaft, adjustable stroke type
  - S2:Double -shaft type

Specifications

Bore (mm)		32	40	50	63	80	100	125
Acting type		Double acting						
Working medium		Clean air(40μm Filteration)						
Mounting type	DNC Series	Basic type FA FB CA CB CR LB TC TC-M						
	DNC-S2 Series	Basic type FA LB TC TC-M						
Working pressure range		0.1~1.0Mpa						
Guaranteed pressure		1.35Mpa						
Working temperature		-5~70℃						
Speed range		50~800mm/s						
Cushion type		Adjustable cushion						
Cushion stroke		24mm			32mm			
Working life		⩾4000Km						
Port size		G1/8	G1/4		G3/8		G1/2	

DNC Series ISO6431 Standard Cylinder

Main Dimensions

DNC Basic type

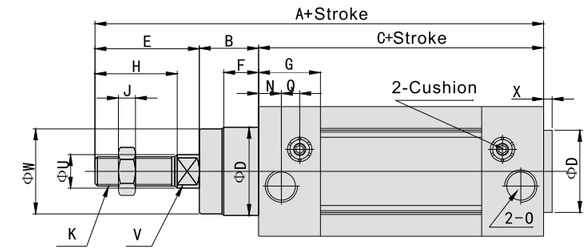

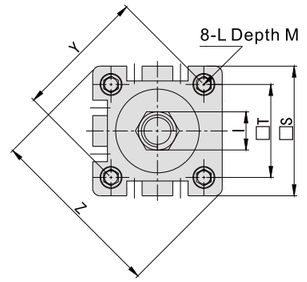

DNC-S2 Double shaft type

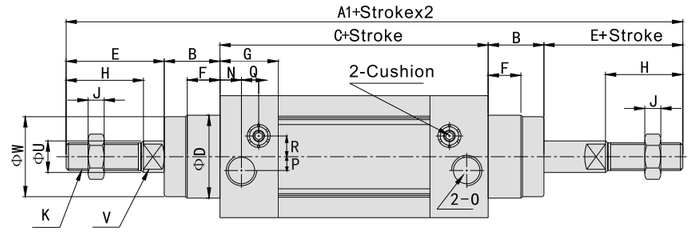

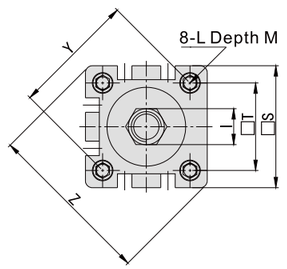

DNC-S1 Double shaft adjustable stroke type

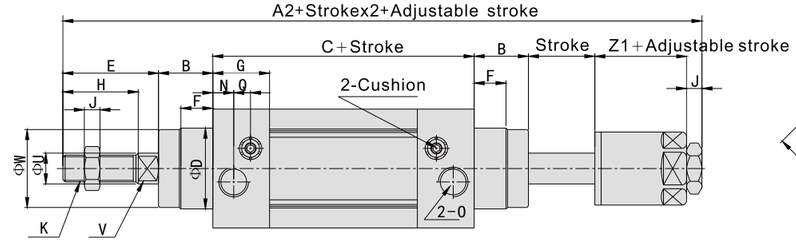

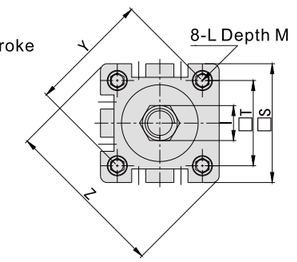

Bore \ Sign	A	A1	A2	B	C	D	E	F	G	H	I	J	K
32	142	190	185	16	94	30	32	10	25	22	17	6	M10X1.25
40	159	213	207	20	105	35	34	10	29.5	24	17	7	M12X1.25
50	175	244	233	27	106	40	42	10	32	32	23	8	M16X1.5
63	190	258	247	26	122	45	42	10	36	32	23	8	M16X1.5
80	214	301	288	35	127	45	52	10	37	40	26	10	M20X1.5
100	229	321	308	40	137	55	52	10	39	40	26	10	M20X1.5
125	279	352	-	46	160	60	73	20.5	44.7	54	-	-	M27X2

Bore \ Sign	M	N	O	P	Q	R	S	T	U	V	W	X	L	Z1
32	12	15	G1/8	5	3	6.5	45	32.5	12	10	28	4	M6	21
40	12	17.5	G1/4	7	3	7	52	38	16	13	33	4	M6	21
50	12	21	G1/4	7	3	9	65	46.5	20	17	38	4	M8	23
63	12	23	G3/8	8	5	9	76	56.5	20	17	40	4	M8	23
80	12	24	G3/8	10	5	12	94	72	25	22	43	5	M10	29
100	12	26	G1/2	10	5	14	112	89	25	22	47	6	M10	29
125	-	22.3	G1/2	13	8	16	134	110	32	27	58	6	M12	-

SI Series ISO6431 Standard Cylinder



SI
SID
SIJ
SI-S
SID-S
SIJ-S

Ordering Code SI Series ISO6431 Standard Cylinder

SI 50 X 50 - S - 20 - LB

- SI — Series Code
  - SI:Standard cylinder
  - SID:Double-shaft type
  - SIJ:Double-shaft adjustable stroke type
- 50 — Bore
- X 50 — Stroke
- S — Magnet
  - Blank : Without Magnet
  - S:With Magnet
- 20 — Adjustable Stroke
  - 10:10mm
  - 20:20mm
  - 30:30mm
  - 40:40mm
  - 50:50mm
  - 75:75mm
  - 100:100mm
- LB — Mounting type
  - Blank: Standard Cylinder
  - LB: Leg mounting
  - FA: Front plate mounting
  - FB: Rear plate mounting
  - CA: Single trunnion mounting
  - CB: Double trunnion mounting
  - CR: Clevis foot
  - TC: Centre trunnion mounting

Specifications

Bore (mm)		32	40	50	63	80	100	125	160	200
Acting type		Double acting								
Working medium		Clean air(40μm Filteration)								
Mounting type	SI Series	Basic type FA FB CA CB LB TC TC-M1 TC-M2								
	SID Series	Basic type FA LB TC TC-M1 TC-M2								
	SIJ Series	Basic type FA LB TC TC-M1 TC-M2								
Working pressure range		0.1~1.0Mpa								
Guaranteed pressure		1.5Mpa								
Working temperature		5~70℃								
Speed range		SI Series: 50~800mm/s Other-Series: 30-800mm/s								
Cushion type		Adjustable cushion								
Cushion stroke		27mm		30mm		36mm		40mm	50mm	
Port size		G1/8	G1/4		G3/8		G1/2		G3/4	

Main Dimensions

Basic type

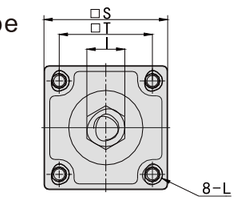

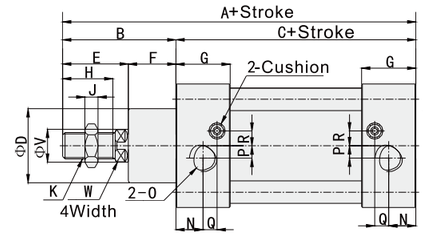

Bore \ Sign	A	B	C	D	E	F	G	H	I	J	K	L	N	O	P	Q	R	S	T	V	W
32	142	48	94	30	32	16	28	22	17	6	M10X1.25	M6	13.5	G1/8	4	7.5	7	47	32.5	12	10
40	159	54	105	35	36	18	29	24	19	7	M12X1.25	M6	16	G1/4	6	9.5	9	53	38	16	13
50	175	69	106	40	44	25	31	32	24	8	M16X1.5	M8	18.5	G1/4	8.5	6.7	9	65	46.5	20	17
63	190	69	121	45	44	25	32	32	24	8	M16X1.5	M8	19	G3/8	6	7.7	9	75	56.5	20	17
80	214	86	128	45	56	30	35	40	30	10	M20X1.5	M10	19	G3/8	10	5	13.5	95	72	25	22
100	229	91	138	55	59	32	36	40	30	10	M20X1.5	M10	18	G1/2	12.5	10	14.5	115	89	25	22
125	279	119	160	60	74	45	46	54	41	13.5	M27X2	M12	23	G1/2	14	12	14	140	110	32	27
160	332	152	180	65	94	58	50	72	55	18	M36X2	M16	25	G3/4	15	12	20	180	140	40	36
200	347	167	180	75	107	60	50	72	55	18	M36X2	M16	25	G3/4	15	12	20	220	175	40	36

Double shaft type

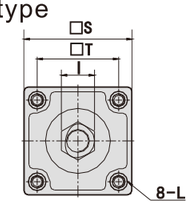

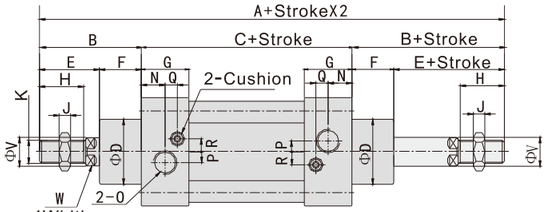

Bore \ Sign	A	B	C	D	E	F	G	H	I	J	K	L	N	O	P	Q	R	S	T	V	W
32	190	48	94	30	32	16	28	22	17	6	M10X1.25	M6	13.5	G1/8	4	7.5	7	47	32.5	12	10
40	213	54	105	35	36	18	29	24	19	7	M12X1.25	M6	16	G1/4	6	9.5	9	53	38	16	13
50	244	69	106	40	44	25	31	32	24	8	M16X1.5	M8	18.5	G1/4	8.5	6.7	9	65	46.5	20	17
63	259	69	121	45	44	25	32	32	24	8	M16X1.5	M8	19	G3/8	6	7.7	9	75	56.5	20	17
80	300	86	128	45	56	30	35	40	30	10	M20X1.5	M10	19	G3/8	10	5	13.5	95	72	25	22
100	320	91	138	55	59	32	36	40	30	10	M20X1.5	M10	18	G1/2	12.5	10	14.5	115	89	25	22
125	398	119	160	60	74	45	46	54	41	13.5	M27X2	M12	23	G1/2	14	12	14	140	110	32	27
160	484	152	180	65	94	58	50	72	55	18	M36X2	M16	25	G3/4	15	12	20	180	140	40	36
200	514	167	180	75	107	60	50	72	55	18	M36X2	M16	25	G3/4	15	12	20	220	175	40	36

Double shaft adjustable stroke type

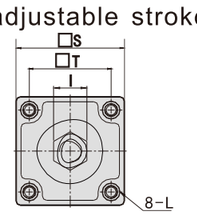

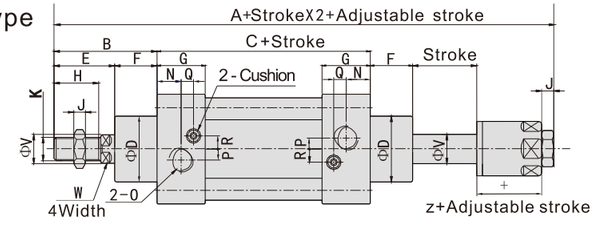

Bore \ Sign	A	B	C	D	E	F	G	H	I	J	K	L	N	O	P	Q	R	S	T	V	W	Z
32	187	48	94	30	32	16	28	22	17	6	M10X1.25	M6	13.5	G1/8	4	7.5	6.5	47	32.5	12	10	21
40	207	54	105	35	36	18	29	24	19	7	M12X1.25	M6	16	G1/4	6	9.5	9	53	38	16	13	21
50	233	69	106	40	44	25	31	32	24	8	M16X1.5	M8	18.5	G1/4	8.5	6.7	7.5	65	46.5	20	17	23
63	250	69	121	45	44	25	32	32	24	8	M16X1.5	M8	19	G3/8	6	7.7	9	75	56.5	20	17	23
80	286	86	128	45	56	30	35	40	30	10	M20X1.5	M10	19	G3/8	10	5	13.5	95	72	25	22	29
100	308	91	138	55	59	32	36	40	30	10	M20X1.5	M10	18	G1/2	12.5	10	14.5	115	89	25	22	29
125	373	119	160	60	74	45	46	54	41	13.5	M27X2	M12	23	G1/2	14	12	14	140	110	32	27	35
160	448	152	180	65	94	58	50	72	55	18	M36X2	M16	25	G3/4	15	12	20	180	140	40	36	40
200	472	167	180	75	107	60	50	72	55	18	M36X2	M16	25	G3/4	15	12	20	220	175	40	36	40

IS09001 CE
VPC PNEUMATIC®

DNC/SI ISO6431 Standard Cylinder Brackets

Ordering Code

SI - 50 - FA

- 50: Bore
- FA: Brackets type

LB:Leg mounting
FA:Front plate mounting
FB:Rear plate mounting
CA:Single trunnion mounting
CB:Double trunnion mounting
CR:Clevis foot
TC:Centre trunnion mounting

Y:Y fitting
I :I fitting
F:Floating fitting
B:Bearing fitting

ISO 6431 Standard

Note:ISO standard accessories,only suitable for DNC,SI etc ISO6431 series standard cylinder.

Accessories

Brackets \ Cylinder		SI	SID	SIJ
Mounting Type	LB	●	●	●
	FA	●	●	●
	FB	●	X	X
	CA	●	X	X
	CB	●	X	X
	CR	●	X	X
	TC	●	●	●
	TC-M1	●	●	●
	TC-M2	●	●	●
Rod end fitting type	I	●	●	●
	Y	●	●	●
	F	●	●	●
	B	●	●	●

Main Dimensions

LB

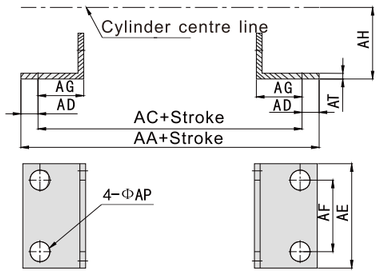

Sign \ Bore	32	40	50	63	80	100	125	160	200
AA	158	179	190	209	248	258	290	340	380
AC	142	161	170	185	210	220	250	300	320
AD	8	9	10	12	19	19	20	20	30
AE	48	53	63	73	98	115	140	180	220
AF	32	36	45	50	63	75	90	115	135
AG	24	28	32	32	41	41	45	60	70
AH	32	36	45	50	63	71	90	115	135
AP	7	9	9	9	12	14	16	18	22
AT	4	4	4	4	5	5	8	8	9

FA/FB

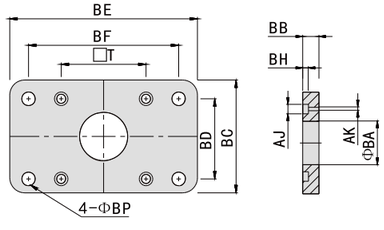

Sign \ Bore	32	40	50	63	80	100	125	160	200
AJ	10.5	10.5	14	14	17	17	19	25	25
AK	7	7	9	9	11	11	13	17	17
BA	30.3	35.3	40.3	45.3	45.3	55.3	60.3	65.3	75.3
BB	10	10	12	12	16	16	20	20	25
BC	50	55	65	75	100	120	140	180	220
BD	32	36	45	50	63	75	90	115	135
BE	80	90	110	125	154	186	224	280	320
BF	64	72	90	100	126	150	180	230	270
BH	6.5	6.5	6.5	8.5	10.5	10.5	8	8	12
BP	7	9	9	9	12	14	16	18	22
T	32.5	38	46.5	56.5	72	89	110	140	175

CA

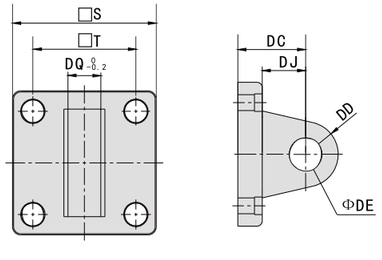

Sign \ Bore	32	40	50	63	80	100	125	160	200
S	47	53	65	75	95	115	140	180	220
T	32.5	38	46.5	56.5	72	89	110	140	175
DC	22	25	27	32	36	41	50	55	60
DD	9	12	12	15	15	20	25	30	30
DE	10	12	12	16	16	20	25	30	30
DJ	13	16	17	22	22	27	33	35.5	37
DQ	25.8	27.8	31.7	39.7	49.7	59.7	69.7	89.7	89.7

DNC/SI ISO6431 Standard Cylinder Brackets

Main Dimensions

CB

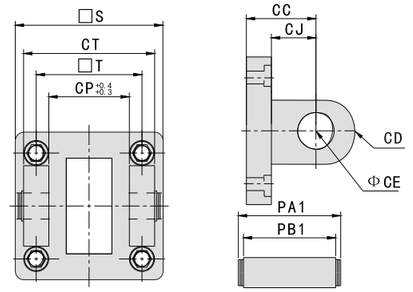

Sign \ Bore	32	40	50	63	80	100	125	160	200
CC	22	25	27	32	36	41	50	55	60
CD	9	12	12	15	15	20	25	30	30
CE	10	12	12	16	16	20	25	30	30
CJ	13	16	17	22	22	27	31	35.5	36
CP	26	28	32	40	50	60	70	90	90
CT	45	52	60	70	90	110	130	170	170
PA1	51	59	67	77	97	119	139	181	181
PB1	45.5	52.5	60.5	70.5	90.5	110.5	130.5	170.5	170.5
S	47	53	65	75	95	115	140	180	220
T	32.5	38	46.5	56.5	72	89	110	140	175

CR

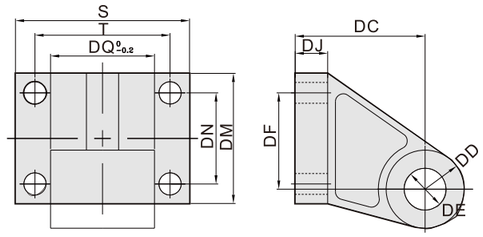

Sign \ Bore	S	T	DC	DD	DE	DF	DJ	DQ	DM	DN
32	51	38	32	10	10	21	8	26	31	18
40	54	41	36	11	12	24	9	28	35	22
50	65	50	57	13	12	33	12	31.5	45	30
63	67	52	50	15	16	37	12.5	40	50	35
80	86	66	63	15	16	41.5	14	50	60	40
100	96	76.5	71.5	18.5	20	55	15	60	70	51

TC

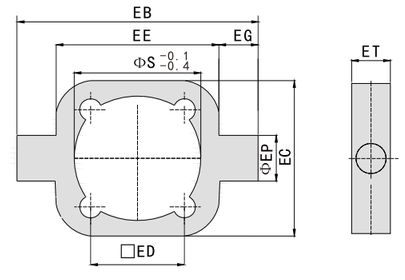

Sign \ Bore	32	40	50	63	80	100	125	160	200
EB	100	113	125	140	160	182	210	264	314
EC	50	58	70	80	100	126	154	196	240
ED	32.5	38	46.5	56.5	72	89	110	140	175
EE	50	63	75	90	110	132	160	200	250
EG	25	25	25	25	25	25	25	32	32
EP	12	16	16	20	20	25	30	32	32
ET	20	24	28	28	28	28	36	40	40
S	36	45	55	68	86	106	132	170	40

TC-M

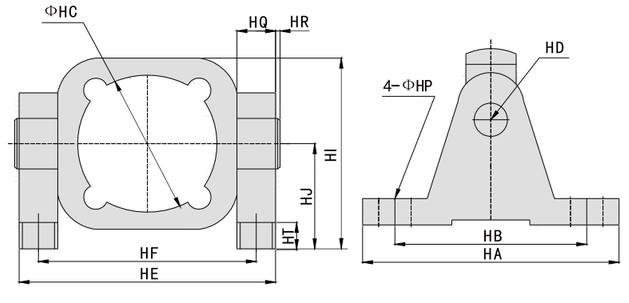

Sign \ Bore	32	40	50	63	80	100
HA	110	110	110	120	120	120
HB	80	80	80	80	80	80
HC	36	45	55	58	86	106
HD	22	22	22	22	22	22
HE	96	109	121	136	156	178
HF	73	86	98	113	133	155
HI	68.5	76.5	82	86	113	130
HJ	43.5	47.5	47	46	63	67
HQ	23	23	23	23	23	23
HR	2	2	2	2	2	2
HT	12	12	12	12	14	14
HP	12	12	12	12	14	14

DNC/SI ISO6431 Standard Cylinder Brackets

Main Dimensions

Y Fitting

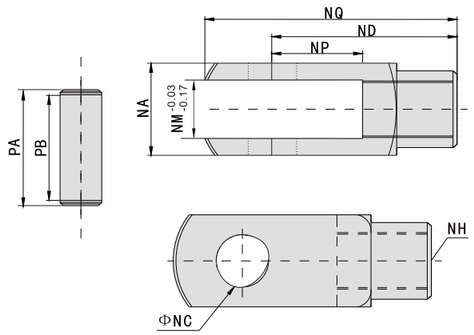

I Fitting

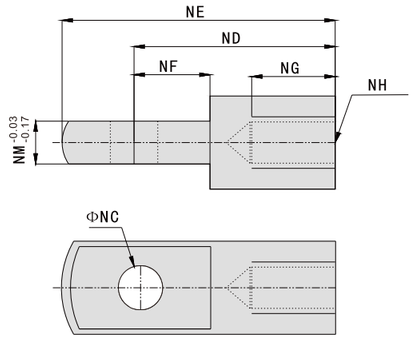

Bore \ Sign	NA	NC	ND	NE	NG	NF	NH	NM	NP	NQ	PA	PB
32	19	10	40	52	20	15	M10X1.25	10	20	52	26.2	20
40	25.4	12	48	67	20	24	M12X1.25	12	24	62	32.8	26.5
50	32	16	64	89	23	32	M16X1.5	16	32	83	39.3	33
63	32	16	64	89	23	32	M16X1.5	16	32	83	39.3	33
80	44.4	20	80	112	30	40	M20X1.5	20	40	105	53.3	45
100	44.4	20	80	112	30	40	M20X1.5	20	40	105	53.3	45
125	55	30	110	155	56	50	M27X2.0	30	54	148	64	55.6
160	70	35	144	201	72	50	M36X2.0	35	72	191	80	70.6
200	70	35	144	201	72	55	M36X2.0	35	72	191	80	70.6

Floating Fitting

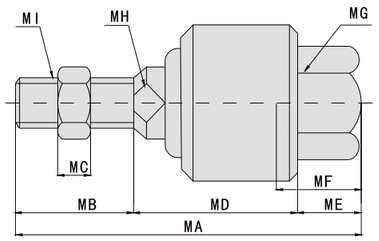

Bore \ Sign	MA	MB	MC	MD	ME	MF	MG	MH	MI
32	73	20	6	45	8	26	M10X1.25	12	M10X1.25
40	77	24	7	46	7	26	M12X1.25	12	M12X1.25
50	106	32	8	62	12	34	M16X1.5	19	M16X1.5
63	106	32	8	62	12	34	M16X1.5	19	M16X1.5
80	122	40	10	68	14	42	M20X1.5	19	M20X1.5
100	122	40	10	68	14	42	M20X1.5	19	M20X1.5
125	147	54	13.5	77	16	40	M27X2.0	24	M27X2.0
160	251	72	18	161	18	78	M36X2.0	36	M36X2.0
200	251	72	18	161	18	78	M36X2.0	36	M36X2.0

B Fitting

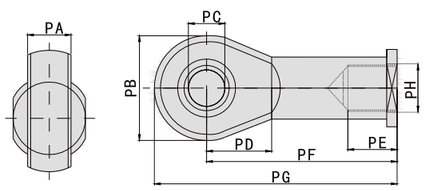

Bore \ Sign	PA	PB	PC	PD	PE	PF	PG	PH
32	14	28	10	15	20	43	57	M10X1.25
40	16	32	12	17	22	50	66	M12X1.25
50	21	42	16	22	28	64	85	M16X1.5
63	21	42	16	22	28	64	85	M10X1.5
80	25	50	20	26	33	77	102	M20X1.5
100	25	50	20	26	33	77	102	M20X1.5
125	37	70	30	36	51	110	145	M27X2.0
160	43	80	35	41	56	125	165	M36X2.0
200	43	80	35	41	56	125	165	M36X2.0

SC/SU Series Standard Cylinder



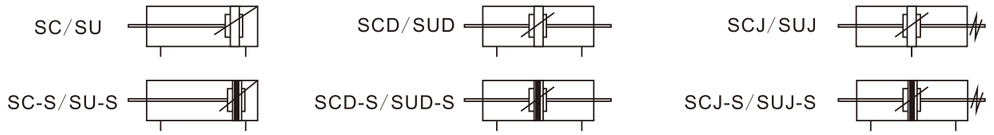

Ordering Code SC/SU Series Standard Cylinder

SC 50 X 50 - S - 20 - LB

- SC: Series Code
  - SC:Standard cylinder
  - SCD:Double-shaft type
  - SCJ:Double-shaft, adjustable stroke type
  - SU:Standard cylinder
  - SUD:Double-shaft type
  - SUJ:Double-shaft, adjustable stroke type
- 50: Bore
- X: Stroke
- S: Magnet
  - Blank : Without Magnet
  - S:With Magnet
- 20: Adjustable Stroke
  - 10:10mm
  - 20:20mm
  - 30:30mm
  - 40:40mm
  - 50:50mm
  - 75:75mm
  - 100:100mm
- LB: Mounting type
  - Blank: Standard Cylinder
  - LB: Leg mounting
  - FA: Front rear plate mounting
  - FB: Front rear plate mounting
  - CA: Single trunnion mounting
  - CB: Double trunnion mounting
  - CR: Double trunnion with Hinge, mounting
  - TC: Centre trunnion mounting

Specifications

Bore (mm)		32	40	50	63	80	100	125	160	200
Acting type		Double acting								
Working medium		Clean air(40μm Filteration)								
Mounting type	SC\SU Series	Basic type FA FB CA CB CR LB TC TC-M								
	SCD\SUD Series	Basic type FA LB TC TC-M								
	SCJ\SUJ Series	Basic type FA LB TC TC-M								
Working pressure range		0.1~0.9Mpa								
Guaranteed pressure		1.5Mpa								
Working temperature		-5~70℃								
Speed range		50~800mm/s								
Cushion type		Adjustable cushion								
Cushion stroke		20mm				32mm				45mm
Port size		G1/8	G1/4		G3/8		G1/2		G3/4	

SC/SU Series Standard Cylinder

Main Dimensions

SC Basic type

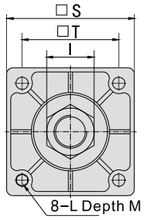

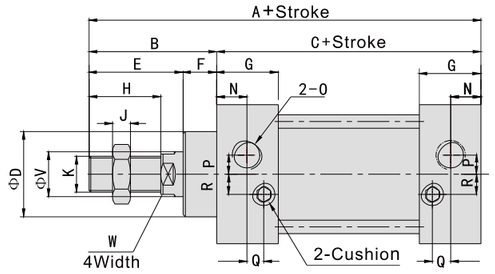

SCD Double shaft type

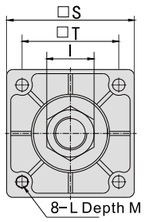

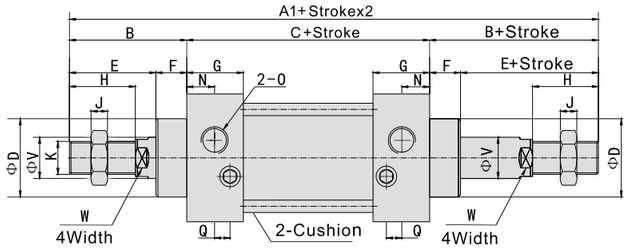

SCJ Double shaft adjustable stroke type

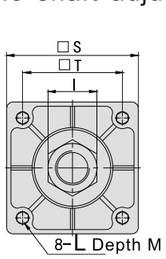

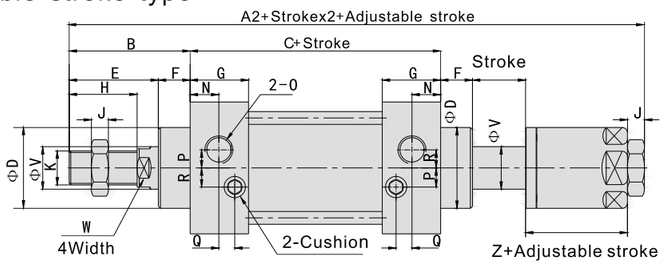

Bore \ Sign	A	A1	A2	B	C	D	E	F	G	H	I	J	K
32	140	187	182	47	93	28	32	15	27.5	22	17	6	M10X1.25
40	142	191	185	48	93	32	34	15	27.5	24	17	7	M12X1.25
50	150	207	196	57	93	38	42	15	27.5	32	23	8	M16X1.5
63	153	210	199	57	96	38	42	15	27.5	32	23	8	M16X1.5
80	183	258	243	75	108	47	54	21	33	40	26	10	M20X1.5
100	188	263	248	75	113	47	54	21	33	40	26	10	M20X1.5
125	246	/	/	101	145	60	70	31	40	54	36	12	M27X2
160	309	/	/	129	180	65	91	38	50	72	50	15	M36X2
200	345	/	/	160	185	75	112	55	50	72	55	18	M36X2

Bore \ Sign	L	M	N	O	P	Q	R	S	T	V	W	Z
32	M6X1	9.5	13.5	G1/8	3.5	7.5	7	45	33	10	10	21
40	M6X1	9.5	13.5	G1/4	6	8.2	9	50	37	16	14	21
50	M6X1	9.5	13.5	G1/4	8.5	8.2	9	62	47	20	17	23
63	M8X1.25	9.5	13.5	G3/8	7	8.2	8.5	75	56	20	17	23
80	M10X1.5	11.5	16.5	G3/8	10	9.5	14	94	70	25	22	29
100	M10X1.5	11.5	16.5	G1/2	11	9.5	14	112	84	25	22	29
125	M12X1.75	15.5	16.5	G1/2	15	6.5	15	140	110	32	29	/
160	M16X2	17.5	25	G1/2	/	/	/	180	140	40	36	/
200	M16X2	17.5	25	G3/4	/	/	/	220	175	40	36	/

SC/SU Series Standard Cylinder Brackets

Main Dimensions

LB

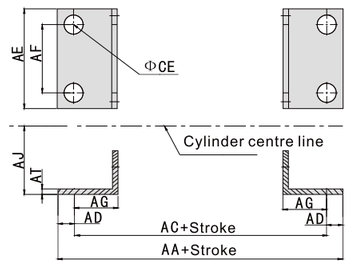

Bore \ Sign	32	40	50	63	80	100	125	160	200
AA	153	169	173	184	200	210	249	328	380
AC	134	140	149	158	168	174	213	288	320
AD	9.5	14.5	12	12	16	18	18	20	20
AE	50	57	68	80	97	112	140	180	220
AF	33	36	47	56	70	84	90	115	135
AG	20.5	23.5	28	31	30	30	45	60	70
AJ	28	30	36.5	41	49	57	90	115	135
AP	9	12	12	12	14	14	16	18	22
AT	3.2	3.2	3.2	3.2	4	4	8	8	10

FA/FB

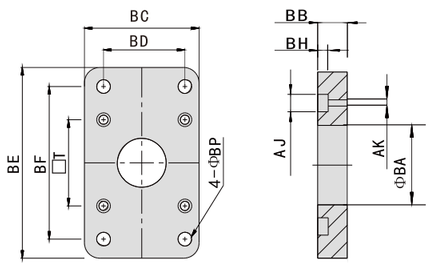

Bore \ Sign	32	40	50	63	80	100	125	160	200
BA	28.3	32.3	38.3	38.3	47.3	47.3	56	63	81
BB	10	10	10	12	16	16	20	25	25
BC	47	52	65	76	95	115	140	180	220
BD	33	36	47	56	70	84	90	115	135
BE	72	84	104	116	143	162	224	280	320
BF	58	70	86	98	119	138	180	230	270
BH	6.5	6.5	6.5	8.5	10.5	10.5	15	20	20
AJ	10.5	10.5	13.5	13.5	16.6	16.6	19	25	25
AK	6.5	6.5	8.5	8.5	10.5	10.5	12.5	16.5	16.5
BP	7	7	9	9	12	12	16	18	22
T	33	37	47	56	70	84	110	140	175

CA

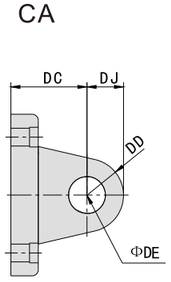

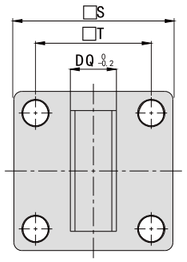

Bore \ Sign	32	40	50	63	80	100	125	160	200
S	48	50	62	75	94	112	140	180	220
T	33	37	47	56	70	84	110	140	175
DC	34	34	34	34	48	48	50	55	60
DD	14	14	15	15	20	20	25	30	30
DE	12	14	14	14	20	20	25	30	30
DJ	14	14	15	15	20	20	25	30	30
DQ	16	20	20	20	32	32	70	90	90

CB

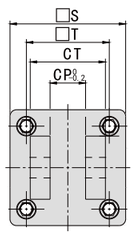

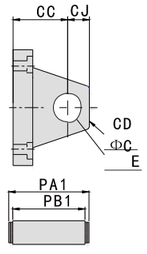

Bore \ Sign	32	40	50	63	80	100	125	160	200
CC	19	19	19	19	32	32	50	55	60
CD	5	5	3	3	8	8	25	30	30
CE	12	14	14	14	20	20	25	30	30
CJ	13	13	15	15	21	21	25	30	30
CP	16.3	20.5	20.3	20.3	32.3	32.3	70	90	90
CT	32	44	52	52	64	64	120	160	160
PA1	41	51.8	60.3	60.3	73.8	73.8	130	170	170
Pb1	33.5	45.8	54	54	65.5	65.5	121.5	161.5	161.5
S	48	50	62	75	94	112	140	180	220
T	33	37	47	56	70	84	110	140	175

SC/SU Series Standard Cylinder Brackets

Main Dimensions

TC

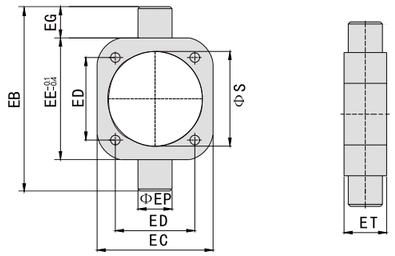

Sign \ Bore	40	50	63	80	100	125	160	200
EB	113	126	138	164	182	210	264	336
EC	63	76	88	114	132	160	200	240
ED	37	47	56	70	84	110	140	175
EE	63	76	88	114	132	160	200	240
EG	30	30	30	30	30	30	32	48
EP	25	30	30	30	30	30	32	38
ET	30	30	30	30	30	30	38	44
S	45.5	55.5	68.5	87.5	107.5	134.5	172.5	212.5

TC-M

For SU Series

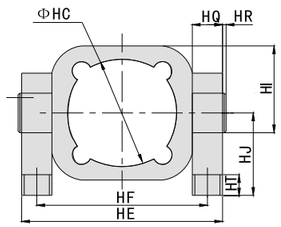

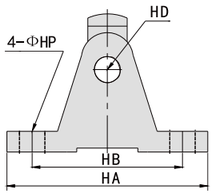

For SC Series

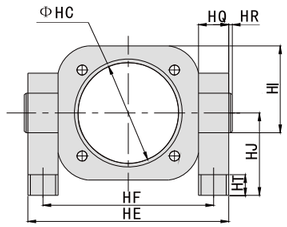

Sign \ Bore	HA	HB	HC	HD	HE	HF	HI	HJ	HQ	HR	HT	HP
40	110	80	45.5	22	109	86	81.5	50	23	2	12	12
50	110	80	55.5	22	122	99	88	50	23	2	12	12
63	110	80	68.5	22	134	111	94	50	23	2	12	12
80	120	85	87.5	22	160	137	127	70	23	2	14	14
100	120	85	107.5	22	178	155	136	70	23	2	14	14

Y Fitting

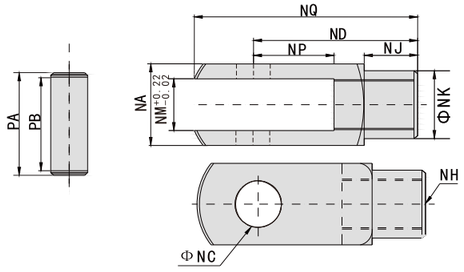

I Fitting

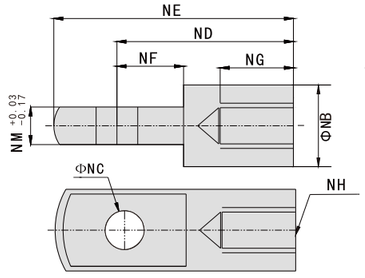

Sign \ Bore	NA	NB	NC	ND	NE	NF	NG	NH	NJ	NK	NM	NP	NQ	PA	PB
32	19	20	10	40	52	15	20	M10X1.25	12	18	10	20	52	25	19.5
40	25.4	24	12	48	67	24	20	M12X1.25	20	23	12	24	62	32.8	26.5
50	32	32	16	64	89	32	23	M16X1.5	22	30	16	32	83	39.3	33
63	32	32	16	64	89	32	23	M16X1.5	22	30	16	32	83	39.3	33
80	44.4	40	20	80	112	40	30	M20X1.5	30	39	20	40	105	53.3	45
100	44.4	40	20	80	112	40	30	M20X1.5	30	39	20	40	105	53.3	45
125	55	45	25	110	155	40	56	M27X2	30	54	48	64	148	64	55
160	80	54	30	120	201	35	50	M36X2	40	54	40	35	150	91	81
200	80	54	30	120	201	35	50	M36X2	40	54	40	35	150	91	81

IS09001 CE
VPC PNEUMATIC®

MB Series Standard Cylinder

Ordering Code — MB Series Standard Cylinder

M □ B □ 32 X 50

- □ (Mounting type): B:Standard cylinder
- 32 (Bore): 32:Φ32mm, 40:Φ40mm, 50:Φ50mm, 63:Φ63mm, 80:Φ80mm, 100:Φ100mm, 125:Φ125mm
- 50 (Stroke)
- □ (Magnet): Blank : Without Magnet; D:With Magnet



MB



MDB

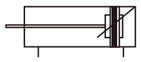

Specifications

Bore (mm)	32	40	50	63	80	100	125
Working medium	Clean air(40μm Filteration)						
Acting type	Double acting						
Max pressure	1.0Mpa						
Min pressure	0.05Mpa						
Speed range(mm/s)	50~1000						50~700
Cushion	Cushion Both Side						
Oil	No Need						
Port size	G1/8	G1/4		G3/8		G1/2	

Main Dimensions

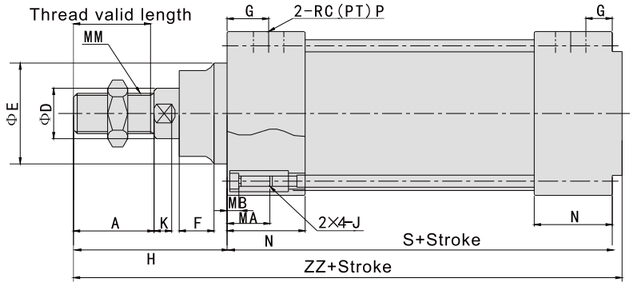

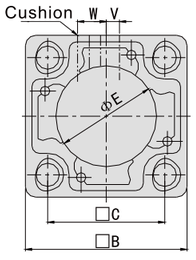

Bore	Stroke range	Thread length	A	□B	□C	ΦD	ΦE	F	G	MA	MB	J	K	MM	N	P	S	V	W	H	ZZ
32	~500	19.5	22	46	32.5	12	30	13	13	16	4	M6X1.0	6	M10X1.25	27	1/8	84	4	6.5	47	135
40	~500	27	30	52	38	16	35	13	14	16	4	M6X1.0	6	M14X1.5	27	1/4	84	4	9	51	139
50	~600	32	35	65	46.5	20	40	14	15.5	16	5	M8X1.25	7	M18X1.5	31.5	1/4	94	5	10.5	58	156
63	~600	32	35	75	56.5	20	45	14	16.5	16	5	M8X1.25	7	M18X1.5	31.5	3/8	94	9	12	58	156
80	~800	37	40	95	72	25	45	20	19	16	5	M10X1.5	10	M22X1.5	38	3/8	114	11.5	14	72	190
100	~800	37	40	114	89	30	55	20	19	16	5	M10X1.5	10	M26X1.5	38	1/2	114	17	15	72	190
125	~1000	50	54	136	110	32	60	27	19	20	6	M12X1.75	13	M27X2.0	38	1/2	120	17	15	97	223

Technical Data 2

Cylinder Peripheral Component

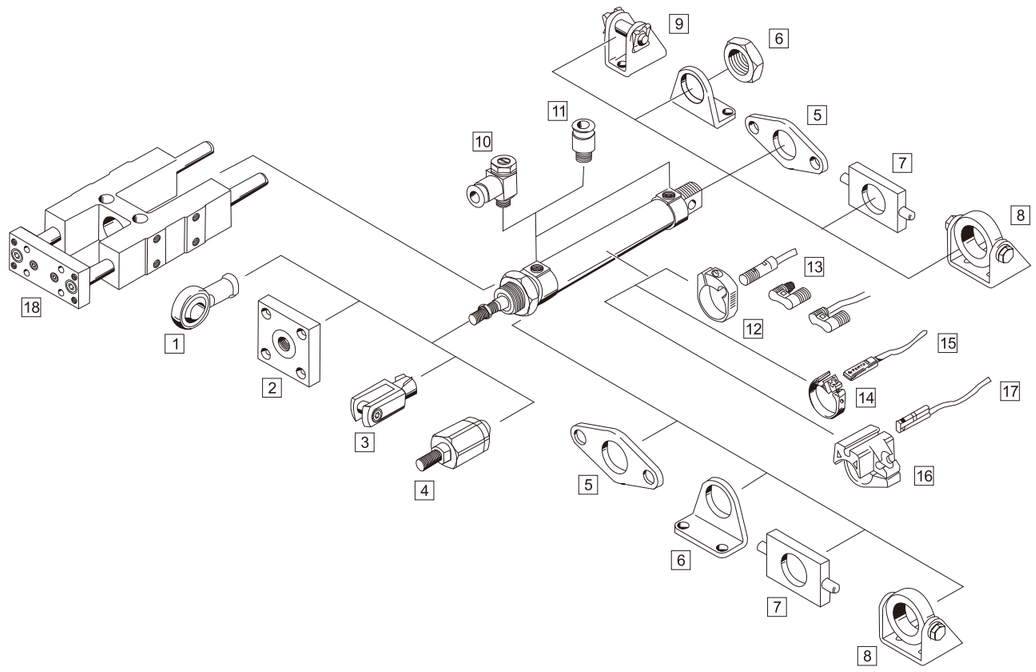

Air cylinder theory force table

Bore(mm)		16			20			25			32			40			50		63	
OD of rod(mm)		6			8			10			12			16			16		16	
Acting type		Single Acting Spring Extend	Double Acting Push force	Double Acting Pull force	Single Acting Spring Extend	Double Acting Push force	Double Acting Pull force	Single Acting Spring Extend	Double Acting Push force	Double Acting Pull force	Single Acting Spring Extend	Double Acting Push force	Double Acting Pull force	Single Acting Spring Extend	Double Acting Push force	Double Acting Pull force	Double Acting Push force	Double Acting Pull force	Double Acting Push force	Double Acting Pull force
Actual working area(mm^2)		201	201	181	314	314	264	490	490	412	804	804	690	1256	1256	1055	1963	1762	3116	2915
Working pressure (Mpa)	0.1	-	20.1	18.1	-	31.4	26.4	-	49.0	41.2	-	80.4	69.0	-	125.6	105.5	196.3	176.2	311.6	291.5
	0.2	-	40.2	36.2	15.7	62.8	52.8	24.5	98.0	82.4	40.2	160.8	138.0	62.8	251.2	211.0	392.6	352.4	487.8	603.1
	0.3	20.1	60.3	54.3	47.1	94.2	79.2	73.5	147.0	123.6	120.6	241.2	207.0	188.4	376.8	316.5	588.9	528.6	799.4	894.6
	0.4	40.2	80.4	72.4	78.5	125.6	105.6	122.5	196.0	164.8	201.0	321.6	276.0	314.0	502.4	422.0	785.2	704.8	1111	1186
	0.5	60.3	100.5	90.5	109.9	157.0	132.0	171.5	245.0	206.0	281.4	402.0	345.0	439.6	628.0	527.5	981.5	881.0	1422	1477
	0.6	80.4	120.6	108.6	141.3	188.4	158.4	220.5	294.0	247.2	361.8	482.4	414.0	565.2	753.6	633.0	1177	1057	1734	1769
	0.7	100.4	140.7	126.7	172.7	219.8	184.8	269.5	343.0	288.4	442.2	562.8	483.0	690.8	879.2	738.5	1374	1233	2045	2060
	0.8	-	-	-	204.1	251.2	211.2	318.5	392.0	329.6	522.6	643.2	552.0	816.4	1004	844.0	1570	1409	2357	2352
	0.9	-	-	-	235.5	282.6	237.6	367.5	441.0	370.8	603.0	723.6	621.0	942.0	1130	949.5	1766	1585	2669	2643

MAL Series Mini Cylinder



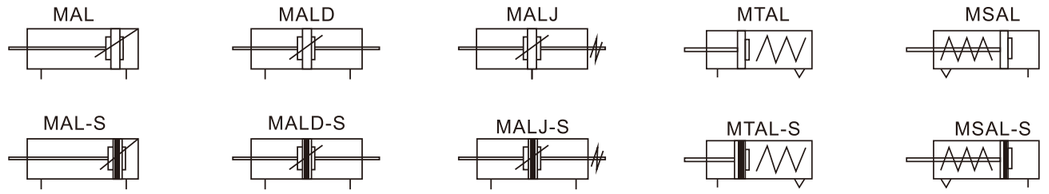

Ordering Code MAL Series Mini Cylinder

MAL - CM 20 X 50 - 20 - S - LB

- **Series Code**: MAL:Double Acting; MSAL:Spring Extend; MTAL:Spring Return; MALD:Double Shaft Acting; MALJ:Adjustable cushion type
- **Rear Cover Type**: CA:Swivelling tail; CM:Round tail; U: Flat tail
- **Bore**: 20
- **Stroke**: 50
- **Adjustable Stroke**: 10:10mm; 20:20mm; 30:30mm; 40:40mm; 50:50mm; 75:75mm; 100:100mm
- **Magnet**: Blank : Without Magnet; S:With Magnet
- **Mounting type**: Blank: Standard Cylinder; LB: Leg mounting; FA: Front rear plate mounting; SDB: Trunnion bracket mounting

Specifications

Bore (mm)	16	20	25	32	40
Acting type	MAL、MALD、MALJ Series: Double acting; MSAL、MATL Series: Single acting				
Working medium	Clean air(40μm Filteration)				
Mounting type	MAL、MSAL、MATL Series: Basic type LB FA SDB; MALD、MALJ Series: Basic type LB FA				
Working pressure range	MAL、MALD、MALJ Series: 0.1~0.9Mpa; MSAL、MATL Series: 0.2~0.9Mpa				
Guaranteed pressure	1.5Mpa				
Working temperature	-5~70℃				
Speed range	MAL Series: 30~800mm/s; Other Series: 50~800mm/s				
Port size	M5X0.8	G1/8			G1/4

MAL Series Mini Cylinder

Main Dimensions

MAL-CA Swivelling Tail

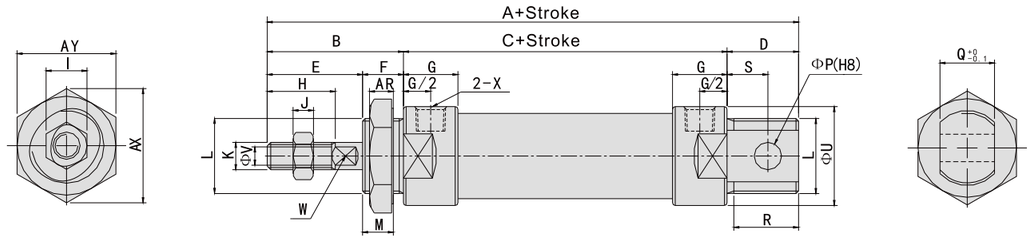

MAL-CM Round Tail

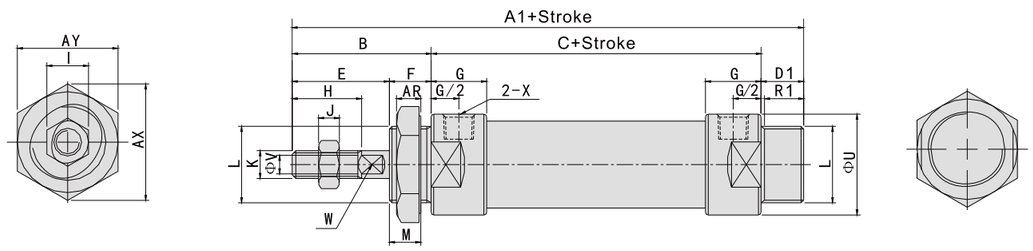

MAL-U Flat Tail

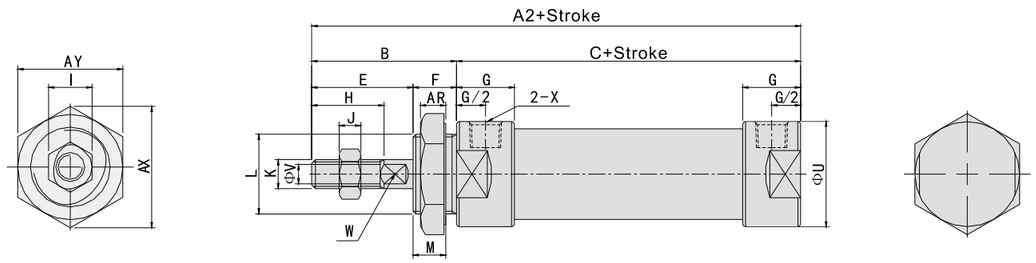

Bore \ Sign	A	A1	A2	B	C	D	D1	E	F	G	H	I	J	K
16	104	104	90	38	52	15	15	24	14	11	16	10	5	M6x1
20	131	122	110	40	70	21	12	28	12	16	20	12	6	M8x1.25
25	135	128	114	44	70	21	14	30	14	16	22	17	6	M10x1.25
32	141	128	114	44	70	27	14	30	14	16	22	17	6	M10x1.25
40	165	152	138	46	92	27	14	32	14	22	24	17	7	M12x1.25

Bore \ Sign	L	M	P	Q	R	R1	S	U	V	W	X	AR	AX	AY
16	M16x1.5	8	6	12	13	/	6	20	6	/	M5	7	24	27.5
20	M22x1.5	10	8	16	19	10	12	29	8	6	G1/8	7	33	29
25	M22x1.5	12	8	16	19	12	12	34	10	8	G1/8	7	33	29
32	M24x2.0	12	10	16	25	12	15	39.5	12	10	G1/8	8	37	32
40	M30x2.0	12	12	20	25	12	15	49.5	16	14	G1/4	9	47	41

MAL Series Mini Cylinder

Main Dimensions

MSAL-CA Single Acting Swivelling Tail

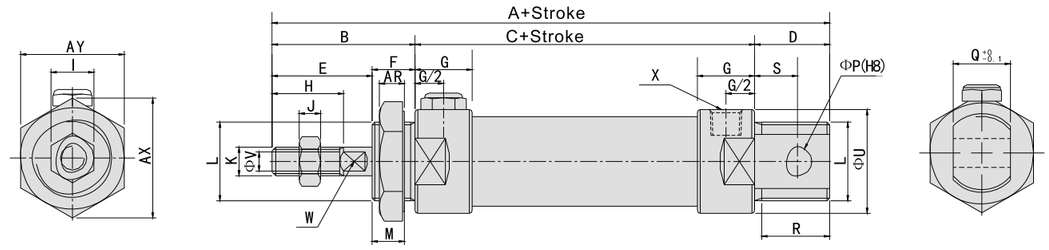

MSAL-CM Single Acting Round Tail

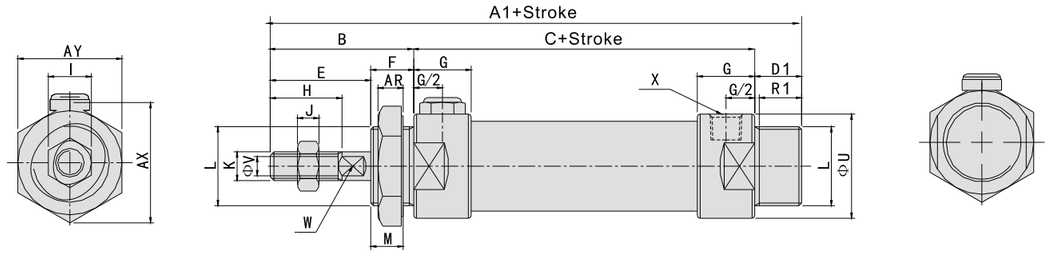

MSAL-U Single Acting Flat Tail

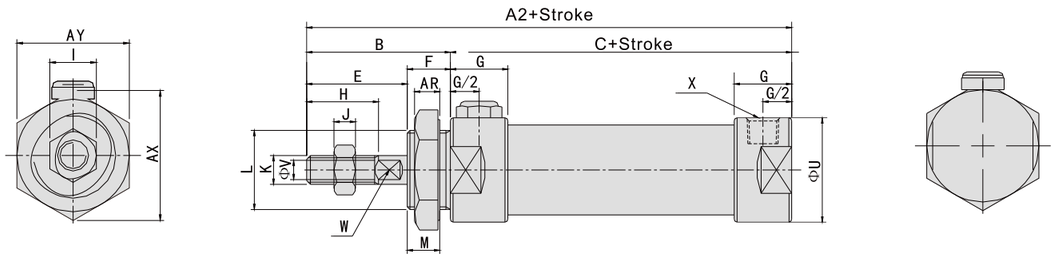

Sign	A		A1		A2		B	C		D	D1	E	F	G	H	I	J
Bore / Stroke	0~50	51~100	0~50	51~100	0~50	51~100		0~50	51~100								
20	131	156	122	147	110	135	40	70	95	21	12	28	12	16	20	12	6
25	135	160	128	153	114	139	44	70	95	21	14	30	14	16	22	17	6
32	141	166	128	153	114	139	44	70	95	27	14	30	14	16	22	17	6
40	165	190	152	177	138	163	46	92	117	27	14	32	14	22	24	17	7

Bore \ Sign	K	L	M	P	Q	R	R1	S	U	V	W	X	AR	AX	AY
20	M8X1.25	M22X1.5	10	8	16	19	10	12	29	8	6	G1/8	7	33	29
25	M10X1.25	M22X1.5	12	8	16	19	12	12	34	10	8	G1/8	7	33	29
32	M10X1.25	M24X2.0	12	10	16	25	12	15	39.5	12	10	G1/8	8	37	32
40	M12X1.25	M30X2.0	12	12	20	25	12	15	49.5	16	14	G1/4	9	47	41

MAL Series Mini Cylinder

Main Dimensions

MALD Double shaft type

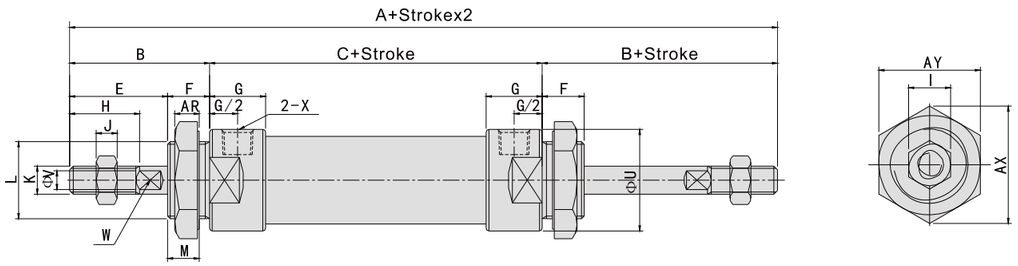

MALJ Double shaft adjustable stroke type

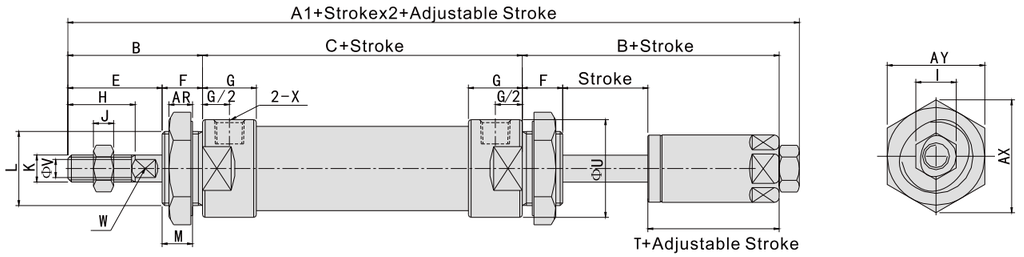

Bore \ Sign	A	A1	B	C	E	F	G	H	I	J	K
20	131	122	40	70	28	12	16	20	12	6	M8X1.25
25	135	128	44	70	30	14	16	22	17	6	M10X1.25
32	141	128	44	70	30	14	16	22	17	6	M10X1.25
40	165	152	46	92	32	14	22	24	17	7	M12X1.25

Bore \ Sign	L	M	U	V	W	X	AR	AX	AY	T
20	M22X1.5	10	29	8	6	G1/8	7	33	29	19
25	M22X1.5	12	34	10	8	G1/8	7	33	29	21
32	M24X2.0	12	39.5	12	10	G1/8	8	37	32	21
40	M30X2.0	12	49.5	16	14	G1/4	9	47	41	21

MA Series Mini Cylinder



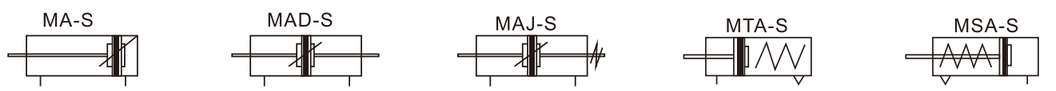

Ordering Code MA Series Mini Cylinder

MA - CM 20 X 50 - 20 - LB

- MA — Series Code
  - MA:Double Acting
  - MSA:Spring Extend
  - MST:Spring Return
  - MAD:Double Shaft Acting
  - MAJ:Adjustable cushion type
- CM — Rear Cover Type
  - CA:Swivelling tail
  - CM:Round tail
  - U: Flat tail
- 20 — Bore
- X — Stroke
- 50 — Adjustable Stroke
  - 10:10mm
  - 20:20mm
  - 30:30mm
  - 40:40mm
  - 50:50mm
  - 75:75mm
  - 100:100mm
- 20 — Mounting type
  - Blank: Standard Cylinder
  - LB: Leg mounting
  - FA: Front rear plate mounting
  - SDB: Trunnion bracket mounting
- LB — Magnetic

Specifications

Bore (mm)		16	20	25	32	40	50	63
Mounting type	MA MAC MAD MAJ	Double acting						
	MSA、MTA	Single Acting					–	
Working medium		Clean air(40μm Filteration)						
Mounting type		MA、MAC、MSA、MTA Series: Basic type LB FA SDB					Basic type	
		MAD、MAJ Series:Basic type LB FA						
Working pressure range		MAL 、MACL、MAD Series : 0.1~0.9Mpa; MSAL Series:0.2~0.9Mpa						
Guaranteed pressure		1.5Mpa						
Working temperature		5~70℃						
Speed range		MA、MAC: 50~800mm/s MSA、MTA 、MAD、MAJ: 30~800mm/s			MA、MAC、MSA、MTA: 30~500mm/s MAD、MAJ: 30~800mm/s			
Cushion type	Standard	Fixed cushion						
	Cushion	–	Adjustable cushion					
Port size		M5X0.8	G1/8				G1/4	

MA Series Mini Cylinder

Main Dimensions

Φ16~Φ40

MA-CA Swivelling tail

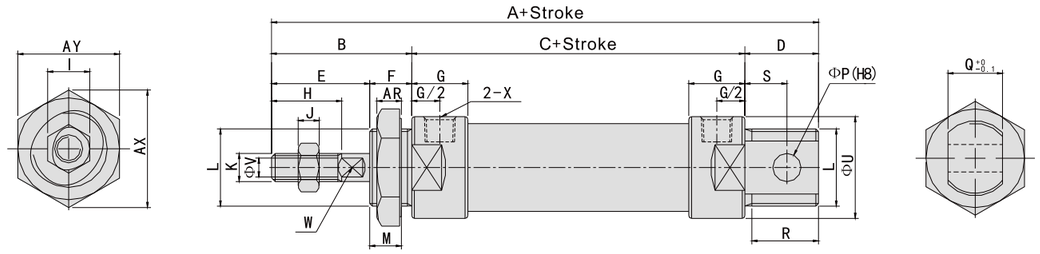

MA-CM Round tail

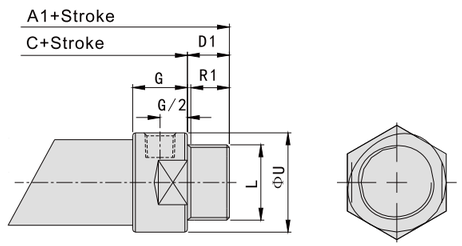

MA-U Flat tail

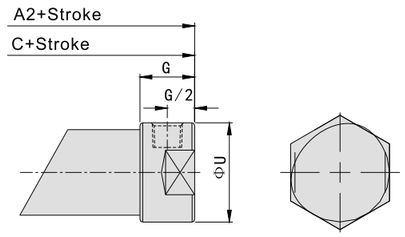

Bore \ Sign	A	A1	A2	B	C	D	D1	E	F	G	H	I	J	K
16	114	114	98	38	60	16	15	22	16	10	16	10	5	M6X1
20	137	128	116	40	76	21	12	28	12	16	20	12	6	M8X1.25
25	141	134	120	44	76	21	14	30	14	16	22	17	6	M10X1.25
32	147	134	120	44	76	27	14	30	14	16	22	17	6	M10X1.25
40	149	136	122	46	76	27	14	32	14	16.7	24	17	7	M12X1.25

Bore \ Sign	L	M	P	Q	R	R1	S	U	V	W	X	AR	AX	AY
16	M16X1.5	14	6	12	14	14	9	21	6	5	M5	6	25	22
20	M22X1.5	10	8	16	19	12	12	27	8	6	G1/8	7	33	29
25	M24X1.5	12	8	16	19	14	12	30	10	8	G1/8	7	33	29
32	M24X2.0	12	10	16	25	14	15	35	12	10	G1/8	8	37	32
40	M30X2.0	12	12	20	25	14	15	41.6	16	14	G1/8	9	47	41

Φ50 Φ63

Swivelling tail

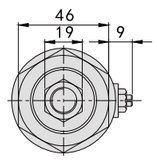

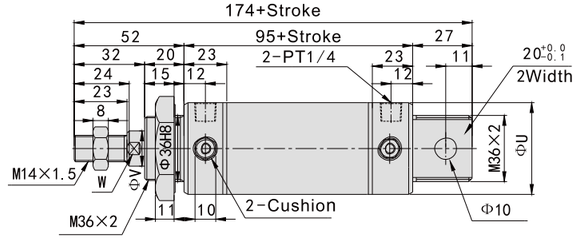

Flat tail

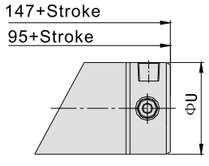

Round tail

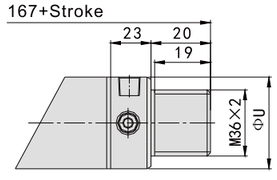

Bore \ Sign	U	V
50	53	16
63	67	16

MAL/MA Series Mini Cylinder Brackets

Main Dimensions

FA

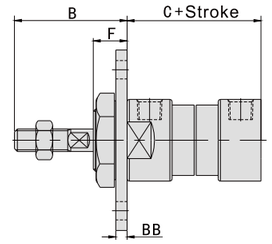

Φ20~Φ25

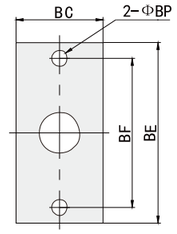

Φ32~Φ40

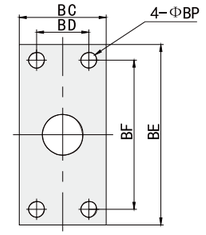

Bore/Stroke \ Sign	B	C (MA Series)	C (MSA Series) 0~50	C (MSA Series) 51~100	C (MAL Series)	C (MSAL Series) 0~50	C (MSAL Series) 51~100	BB	BC	BD	BE	BF	BP	F
16	38	60	60	85	-	-	-	3	26	–	52	40	5.5	16
20	40	76	76	101	70	70	95	4	38	–	64	50	6.5	12
25	44	76	76	101	70	70	95	4	38	–	64	50	6.5	14
32	44	76	76	101	70	70	95	4	47	33	72	58	6.5	14
40	46	76	76	101	92	92	117	4	50	36	84	70	6.5	14

LB

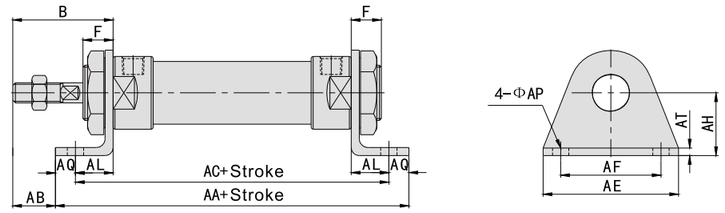

Bore/Stroke \ Sign	B	F	AA (MA Series)	AA (MSA Series) 0~50	AA (MSA Series) 51~100	AB	AC (MA serices)	AC (MSA Series) 0~50	AC (MSA Series) 51~100	AA (MAL Series)	AA (MSAL Series) 0~50	AA (MSAL Series) 51~100	AC (MAL系列)	AC (MSAL Series) 0~50	AC (MSAL Series) 51~100	AE	AF	AL	AQ	AP	AT	AH
16	38	16	98	98	123	25	86	86	111	-	-	-	-	-	-	44	32	13	6	5.5	3	20
20	40	12	122	122	147	25	106	106	131	116	116	141	100	100	125	54	40	15	8	6.5	3	25
25	44	14	122	122	147	29	106	106	131	116	116	141	100	100	125	54	40	15	8	6.5	3	25
32	44	14	142	142	167	19	126	126	151	136	136	161	120	120	145	59	45	25	8	6.5	4	32
40	46	14	142	142	167	21	126	126	151	158	158	183	142	142	167	64	50	25	8	6.5	4.5	36

SDB

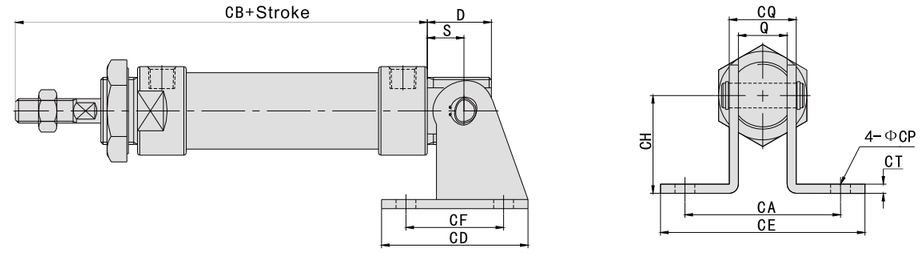

Bore/Stroke \ Sign	D	S	Q	CA	CB (MA Series)	CB (MSA Series) 0~50	CB (MSA Series) 51~100	CB (MAL Series)	CB (MSAL Series) 0~50	CB (MSAL Series) 51~100	CD	CE	CF	CH	CT	CP	CQ
16	16	9	12	–	107	107	132	-	-	-	23	-	12	20	2.3	5.5	16.5
20	21	12	16	51	128	128	153	122	122	147	48	67	32	32	3	6.5	22
25	21	12	16	51	132	132	157	126	126	151	48	67	32	32	3	6.5	22
32	27	15	16	51	135	135	160	129	129	154	52	67	36	36	4	6.5	24
40	27	15	20	55	137	137	162	153	153	178	56	71	40	40	4	6.5	28

MAL/MA Series Mini Cylinder Brackets

Main Dimensions

Y Fitting

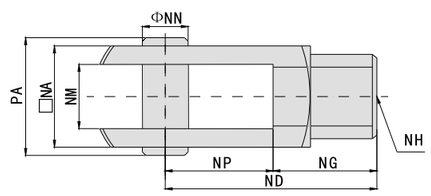

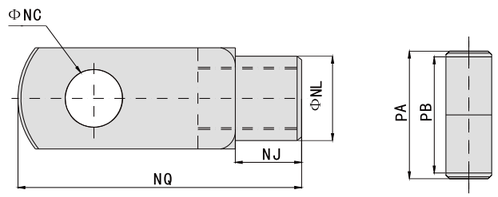

I Fitting

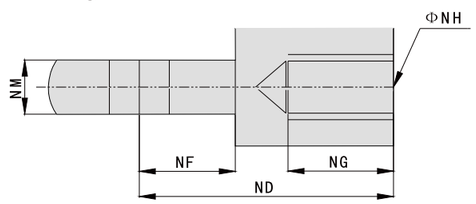

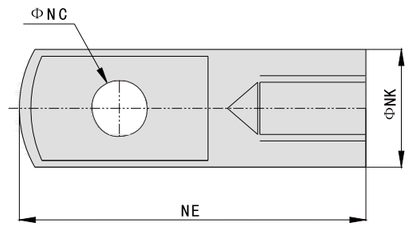

Bore \ Sign	NA	NC	ND	NE	NF	NG	NH	NJ	NK	NL	NM	NN	NP	NQ	PA	PB
16	12	3.5	12	28	8.5	12.5	M6X1	7	12	12	6	5	8.5	28	17	12.5
20	16	8	30	40	11	15	M8X1.25	10	16	14	8	8	15	40	21	16.5
25	19	10	40	52	15	20	M10X1.25	12	20	18	10	10	20	52	25	19.5
32	19	10	40	52	15	20	M10X1.25	12	20	18	10	10	20	52	25	19.5
40	25.4	10	48	67	15	25	M12X1.25	20	24	23	14	10	20	57	31	26

Floating Fitting

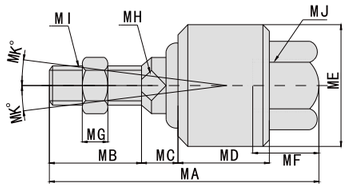

Bore \ Sign	MA	MB	MC	MD	ME	MF	MG	MH	MI	MJ	MK
20	51	20	6	17	24	11.5	6	8	M8X1.25	M8X1.25	13
25	58	22	7	21	26	11.5	7	10	M10X1.25	M10X1.25	12
32	58	22	7	21	26	11.5	7	10	M10X1.25	M10X1.25	12
40	58	22	8	21	28	11.5	8	12	M12X1.25	M12X1.25	12
50	70	22.5	8.5	28	34.5	13	8	15	M14X1.5	M14X1.5	13
63	70	22.5	8.5	28	34.5	13	8	15	M14X1.5	M14X1.5	13

Bearing Fitting

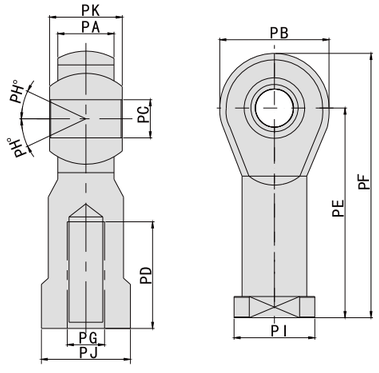

Bore \ Sign	PA	PB	PC	PD	PE	PF	PG	PH	PI	PJ	PK
20	9	24	8	16	36	48	M8X1.25	13	16	14	12
25	11	26	10	20	43	56	M10X1.25	13	19	17	14
32	11	26	10	20	43	56	M10X1.25	13	19	17	14
40	12	32	12	24	50	66	M12X1.25	13	22	19	16
50	15	40	16	28	64	84	M16X1.5	15	27	22	21
63	15	40	16	28	64	84	M16X1.5	15	27	22	21

IS09001 CE
VPC PNEUMATIC®

MI Series Mini Cylinder



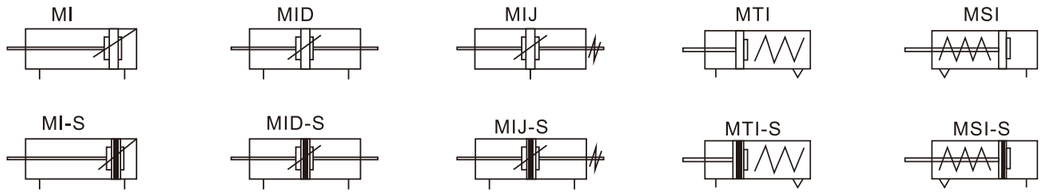

Ordering Code

MI Series Mini Cylinder

MI 16 x 40 - S - CA

- MI — Series Code
  - MI: Basic Type
  - MID:Double Shaft Type
  - MIJ:Double Shaft Adjustable Type
  - MSI:Spring Extend
  - MTI:Spring Return
  - MIC:Double Adjustable Cushion
- 16 — Bore
- 40 — Stroke
- S — Magnet
  - Blank : Without Magnet
  - S:With Magnet
- CA — Rear Cover Type
  - CA:Swivelling tail
  - CM:Round tail
  - U: Flat tail

Mark: According to ISO6432 CETOPRP52P Standard

Specifications

Bore (mm)		8	10	12	16	20	25	32	40
Acting type		Double acting,Single acting spring extend,Single acting spring return							
Working medium		Clean air(40μm Filteration)							
pressure range	Double acting	0.05~0.7Mpa							
	Single acting	0.2~0.7Mpa							
Guaranteed pressure		1.5Mpa							
Working temperature		-5~70°C							
Speed range		50~750mm/s							
Cushion type		MIC Series: Adjustable Cushion Other Series: Anti-bump cushion							
Material		Stainless steel barrel							
Port size		M5X0.8				G1/8		G1/4	

MI Series Mini Cylinder

Main Dimensions

CA Swivelling tail

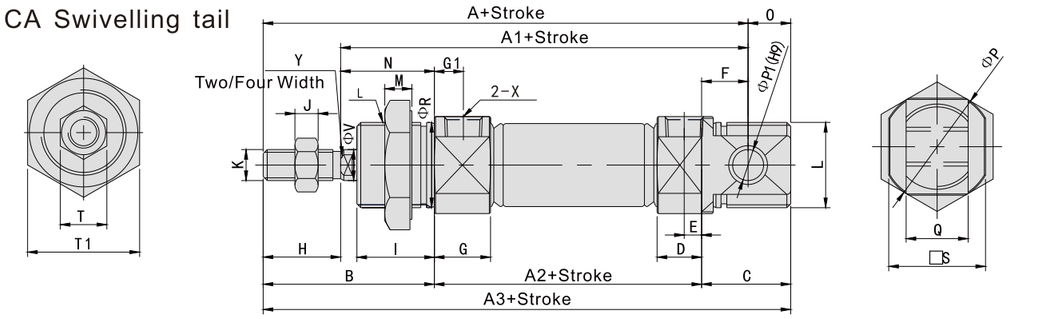

R

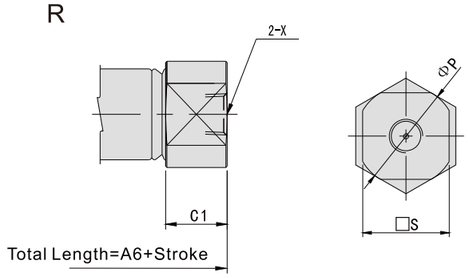

CM Round tail

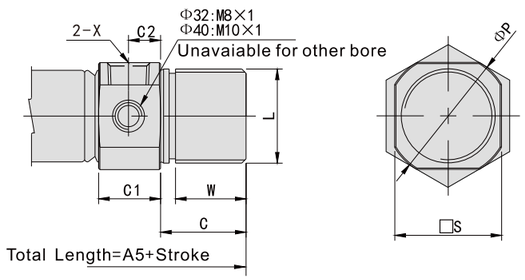

U Flat tail

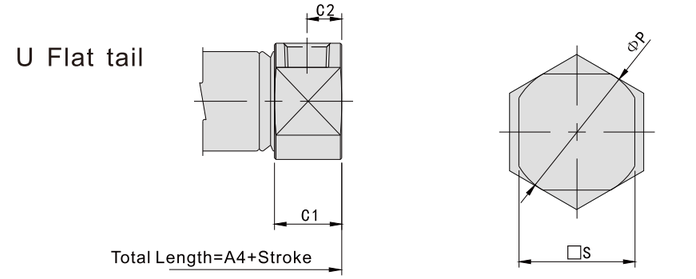

Bore \ Sign	A	A1	A2	A3	A4	A5	A6	B	C	C1	C2	D	E	F	G	G1	H	I
8	76	64	46	86	74	-	-	28	12	9.5	5	9.5	5	6	11.5	7	12	12
10	76	64	46	86	74	-	-	28	12	9.5	5	9.5	5	6	11.5	7	12	12
12	91	75	50	105	88	-	-	38	17	10.5	6	10.5	6	9	12.5	8	16	17
16	98	82	56	111	94	111	94	38	17	10.5	6	10.5	6	9	12.5	8	16	17
20	115	95	62	126	106	126	106	44	20	14.5	7.5	14.5	7.5	12	14.5	7.5	20	20
25	126	104	65	137	115	137	114.5	50	22	15.5	8	16	8	12	16	8	22	22
32	-	-	-	-	125	140	126	58	14	15.5	8	-	-	-	16.5	9	20	30
40	-	-	-	-	158	174	158	69	16	22	11.5	-	-	-	22	12	24	35

Bore \ Sign	J	K	L	M	N	O	P	P1	Q	R	S	T	T1	X	V	W	Y
8	2.5	M4X0.7	M12X1.25	6	16	10	17	4	8	12	15	7	17	M5X0.8	4	-	-
10	2.5	M4X0.7	M12X1.25	6	16	10	17	4	8	12	15	7	17	M5X0.8	4	-	-
12	5	M6X1.0	M16X1.5	6	22	14	20	6	12	16	18	10	22	M5X0.8	6	-	5
16	5	M6X1.0	M16X1.5	6	22	13	22	6	12	16	20	10	22	M5X0.8	6	13.5	5
20	6	M8X1.25	M22X1.5	7	24	11	29	8	16	22	25	12	29	G1/8	8	16.5	6
25	6	M10X1.25	M22X1.5	7	28	11	33.5	8	16	22	30	17	29	G1/8	10	18.5	8
32	6	M10X1.5	M30X1.5	7	38	-	37.5	-	-	30	34.5	17	36	G1/8	12	10.5	10
40	7	M12X1.75	M38X1.5	8	45	-	46.5	-	-	38	42.5	17	46	G1/4	16	12.5	14

CJ2B Series Mini Cylinder

Ordering Code CJ2B Series Mini Cylinder

C□J 2 B □ 6 - 15 - R

- Acting: Blank:Basic type; S:Single acting spring extend; T:Single acting spring return
- Stroke: 0~1000
- Magnet: Blank : Without Magnet; D:With Magnet
- Bore: 6:Φ6; 10:Φ10; 16:Φ16
- Join Type: Blank: vertical; R:horizontal



Specifications

Bore (mm)	6	10	16
Working medium	Clean air(40μm Filteration)		
Guaranteed pressure	1.05Mpa		
Max working pressure	0.7Mpa		
Min working pressure	0.12Mpa	0.06Mpa	
Working temperature	-10~70℃		
Speed range	50~750mm/s		
Cushion type	Rubber Cushion		
Tolerance of stroke	±1.0mm		

CDM2B Series Mini Cylinder

Ordering Code CDM2B Series Mini Cylinder

C□M 2 B □ - 20 x 50 - □

- Magnet: Blank : No Magnet; D:With Magnet
- Acting: Blank:Basic type; S:Single acting Spring Extend; T:Single acting Spring Return
- Bore: 20~40mm
- Stroke: 0~1000mm
- Cushion: Blank: Rubber cushion; A:Air cushion



Specifications

Bore (mm)	20	25	32	40
Working medium	Clean air(40μm Filteration)			
Acting type	Double acting			
Guaranteed pressure	0.05~1.0Mpa			
Working temperature	-10~70℃			
Cushion type	Rubber Cushion(Standard),Air Cushion(Optional)			
Speed range	Min:10mm/s		Max:1000mm/s	

Technical Data 3

Cylinder Peripheral Component

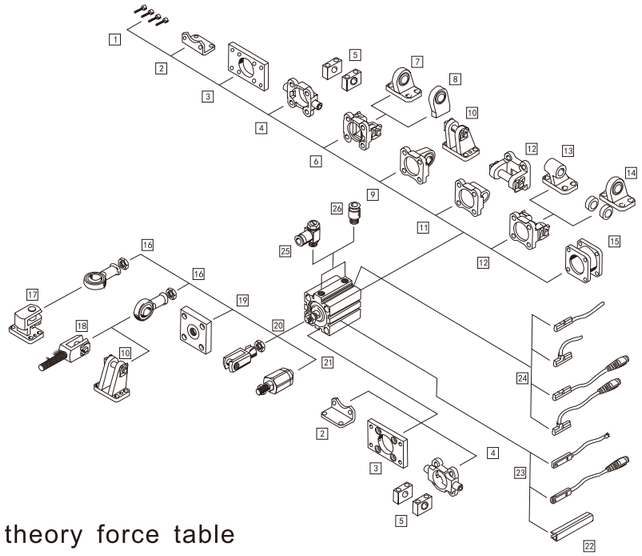

Air cylinder theory force table

Bore (mm)	Piston Size (mm)	Acting Type		Pressure Square (mm^2)	Air Pressure(Mpa) 0.1	0.2	0.3	0.4	0.5	0.6	0.7
12	6	Single acting extend		113	-	7.0	18.3	29.6	40.9	52.2	63.5
		Single acting return		85	-	1.4	9.9	18.4	26.9	35.4	43.9
		Double acting	Press side	113	-	22.6	33.9	45.2	56.5	67.8	79.1
			Pull side	85	-	1.7	25.5	3.4	42.5	5.1	59.5
16	6	Single acting extend		201	-	13.6	33.7	53.8	73.9	94.0	114.1
		Single acting return		173	-	8.0	25.3	42.6	59.9	77.2	94.5
		Double acting	Press side	201	-	40.2	60.3	80.4	100.5	120.6	140.7
			Pull side	173	-	34.6	51.9	69.2	86.5	103.8	121.1
20	8	Single acting extend		314	-	28.7	60.1	91.5	122.9	154.3	185.7
		Single acting return		264	-	18.7	45.1	71.5	97.9	124.3	150.7
		Double acting	Press side	314	-	62.8	94.2	125.6	157.0	188.4	219.8
			Pull side	264	-	52.8	79.2	105.6	132.0	158.4	184.8
25	10	Single acting extend		490	-	58.0	107.0	156.0	205.0	254.0	303.0
		Single acting return		412	-	42.4	83.6	124.8	166.0	207.2	248.4
		Double acting	Press side	490	-	98.0	147.0	196.0	245.0	294.0	343.0
			Pull side	412	-	82.4	123.6	164.8	206.0	247.2	288.4
32	12	Single acting extend		804	-	112.1	192.5	272.9	353.3	433.7	514.1
		Single acting return		690	-	89.3	158.3	227.3	296.3	365.3	434.3
		Double acting	Press side	804	-	160.8	241.2	321.6	402.0	482.4	562.8
			Pull side	690	-	138.0	207.0	276.0	345.0	414.0	483.0
40	16	Single acting extend		1256	-	200.8	326.4	452.0	577.6	703.2	828.8
		Single acting return		1055	-	160.6	266.1	371.6	477.1	582.6	688.1
		Double acting	Press side	1256	125.6	251.2	376.8	502.4	628.0	753.6	879.2
			Pull side	1055	105.5	211.0	316.5	422.0	527.5	633.0	738.5
50	20	Single acting extend		1963	196.3	392.6	588.9	785.2	981.5	1177.8	1374.1
		Single acting return		1649	164.9	329.8	494.7	659.6	824.5	989.4	1154.3
63	20	Double acting	Press side	3117	311.7	623.4	935.1	1246.8	1558.5	1870.2	2181.9
			Pull side	2803	280.3	560.6	840.9	1121.2	1401.5	1681.8	1962.1
80	25	Single acting extend		5026	502.6	1005.2	1507.8	2010.4	2513.0	3015.6	3518.2
		Single acting return		4536	453.6	907.2	1360.8	1814.4	2268.0	2721.6	3175.2
100	32	Double acting	Press side	7853	785.3	1570.6	2355.9	3141.2	3926.5	4711.8	5497.1
			Pull side	7049	704.9	1409.8	2114.7	2819.6	3524.5	4229.4	4934.3

SDA Series Compact Cylinder





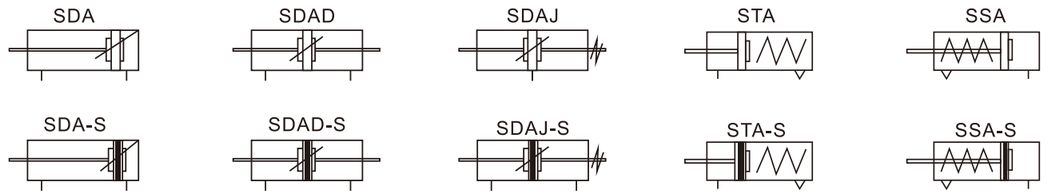

Ordering Code SDA Series Compact Cylinder

SDA S 20 X 30 - 20 - B

- SDA — Series Code
  - SDA:Double Acting
  - SSA:Single Acting Spring Extend
  - STA:Single Acting Spring Return
  - SDAD:Double Shaft Acting
  - SDAJ:Adjustable cushion type
- S — Magnet
  - Blank : Without Magnet
  - S:With Magnet
- 20 — Bore
- 30 — Stroke
- 20 — Adjustable Stroke
  - 10:10mm
  - 20:20mm
  - 30:30mm
  - 40:40mm
  - 50:50mm
  - 75:75mm
  - 100:100mm
- B — Thread
  - Blank: Female thread
  - B: Male thread
  - N: No thread

Specifications

Bore (mm)		12	16	20	25	32	40	50	63	80	100
Acting type		Double acting									
		Single Acting Spring Extend、Single Acting Spring Return								-	
Working medium		Clean air(40μm Filteration)									
pressure range	Double acting	0.1~0.9Mpa									
	Single acting	0.2~0.9Mpa								-	
Guaranteed pressure		1.5Mpa(213Psi)									
Working temperature		-5~70℃									
Speed range	Double acting	30~500mm/s						30~350mm/s		30~250mm/s	
	Single acting	100-500mm/s						-			
Cushion type		Fixed Cushion									
Port size		M5X0.8				G1/8		G1/4		G3/8	

SDA Series Compact Cylinder

Main Dimensions SDA/SDAS (Double Acting Type)

Φ12-Φ16

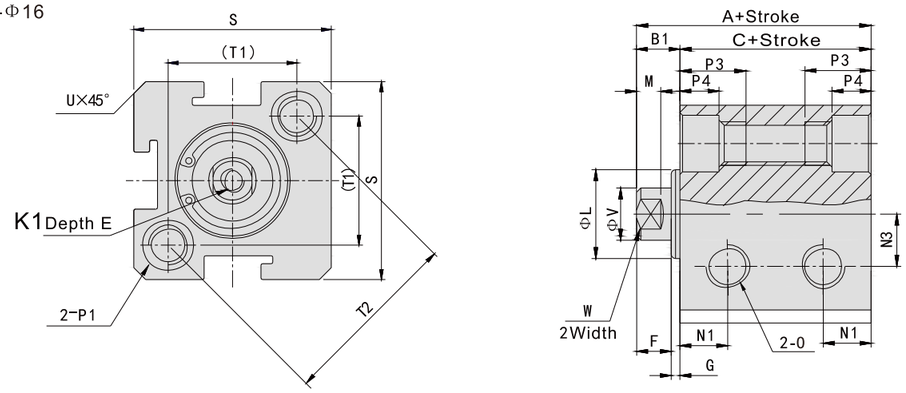

Φ20-Φ100

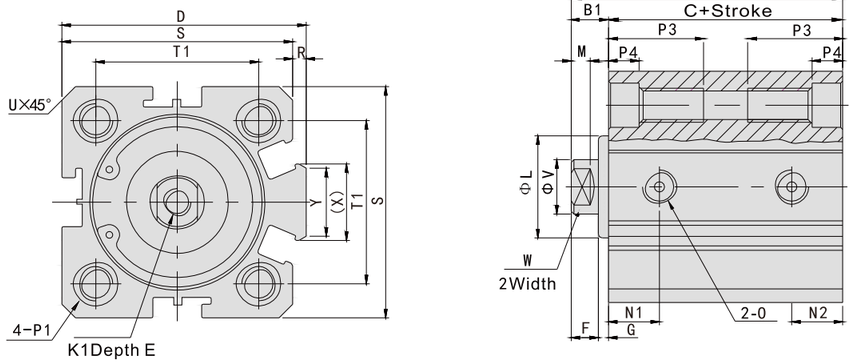

Model	Standard			With Magnet			D	E	F	G	K1	L	M	N1		N2		N3
Bore/Sign	A	B1	C	A	B1	C								S=5	S>5	S=5	S>5	
12	22	5	17	32	5	27	-	6	4	1	M3X0.5	10.2	2.8	6.3		6.3		6
16	24	5.5	18.5	34	5.5	28.5	-	6	4	1.5	M3X0.5	11	2.8	7.3		7.3		6.5
20	25	5.5	19.5	35	5.5	29.5	36	8	4	1.5	M4X0.7	15	2.8	7.5		7.5		-
25	27	6	21	37	6	31	42	10	4	2	M5X0.8	17	2.8	8		8		-
32	31.5	7	24.5	41.5	7	34.5	50	12	4	3	M6X1	22	2.8	9		9		-
40	33	7	26	43	7	36	58.5	12	4	3	M8X1.25	28	2.8	10		10		-
50	37	9	28	47	9	38	71.5	15	5	4	M10X1.5	38	2.8	10.5		10.5		-
63	41	9	32	51	9	42	84.5	15	5	4	M10X1.5	40	2.8	9.5	12	9.5	11	-
80	52	11	41	62	11	51	104	20	6	5	M14X1.5	45	4	11.5	14.5	11.5	14.5	-
100	63	12	51	73	12	61	124	20	7	5	M18X1.5	55	4	16	20.5	16	20.5	-

Bore \ Sign	O	P1	P3	P4	R	S	T1	T2	U	V	W	X	Y
12	M5X0.8	Double Side:Φ6.5 Thread:M5X0.8 Through Hole:Φ4.2	12	4.5	-	25	16.2	23	1.6	6	5	-	-
16	M5X0.8	Double Side:Φ6.5 Thread:M5X0.8 Through Hole:Φ4.2	12	4.5	-	29	19.8	28	1.6	6	5	-	-
20	M5X0.8	Double Side:Φ6.5 Thread:M5X0.8 Through Hole:Φ4.2	14	4.5	2	34	24	-	2.1	8	6	11.3	10
25	M5X0.8	Double Side:Φ8.2 Thread:M6X1.0 Through Hole:Φ4.6	15	5.5	2	40	28	-	3.1	10	8	12	10
32	G1/8	Double Side:Φ8.2 Thread:M6X1.0 Through Hole:Φ4.6	16	5.5	6	44	34	-	2.15	12	10	18.3	15
40	G1/8	Double Side:Φ10 Thread:M8X1.25 Through Hole:Φ6.5	20	7.5	6.5	52	40	-	2.25	16	14	21.3	16
50	G1/4	Double Side:Φ11 Thread:M8X1.25 Through Hole:Φ6.5	25	8.5	9.5	62	48	-	4.15	20	17	30	20
63	G1/4	Double Side:Φ11 Thread:M8X1.25 Through Hole:Φ6.5	25	8.5	9.5	75	60	-	3.15	20	17	28.7	20
80	G3/8	Double Side:Φ14 Thread:M12X1.75 Through Hole:Φ9.2	25	10.5	10	94	74	-	3.65	25	22	36	26
100	G3/8	Double Side:Φ17.5 Thread:M14X2 Through Hole:Φ11.3	30	13	10	114	90	-	3.65	32	27	35	26

SDA Series Compact Cylinder

Main Dimensions SSA/SSAS(Single Acting Spring Extend)

Φ12-Φ16

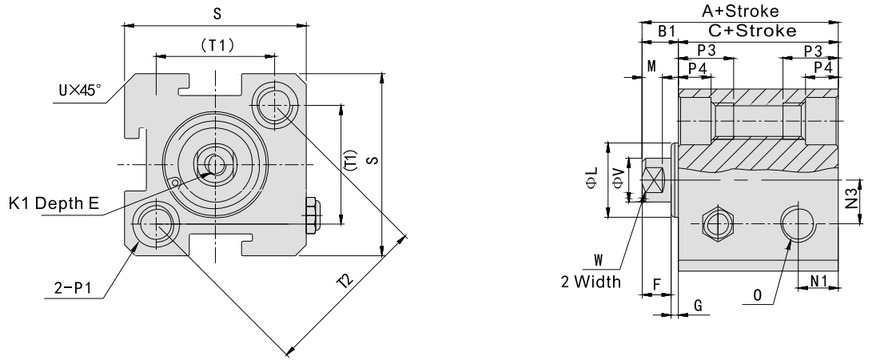

Φ20-Φ40

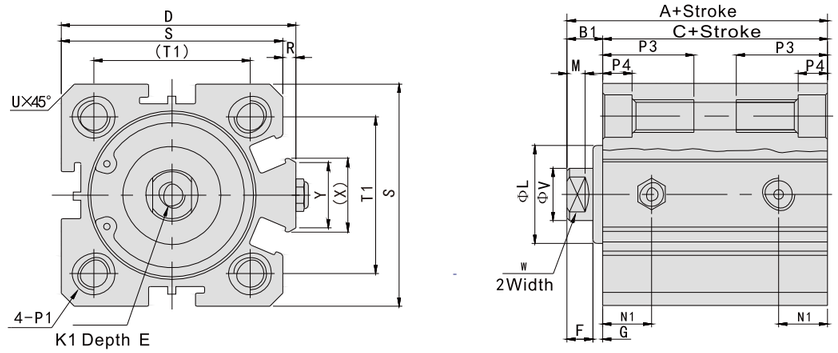

Model	Standard					With Magnet					D	E	F	G	K1	L	M	N1	N3
Bore/Sign Stroke	A		B1	C		A		B1	C										
	≤10	>10		≤10	>10	≤10	>10		≤10	>10									
12	32	42	5	27	37	42	52	5	37	47	-	6	4	1	M3X0.5	10.2	2.8	6.3	6
16	34	44	5.5	28.5	38.5	44	54	5.5	38.5	48.5	-	6	4	1.5	M3X0.5	11	2.8	7.3	6.5
20	35	45	5.5	29.5	39.5	45	55	5.5	39.5	49.5	36	8	4	1.5	M4X0.7	16	2.8	7.5	-
25	37	47	6	31	41	47	57	6	41	51	42	10	4	2	M5X0.8	17	2.8	8	-
32	41.5	51.5	7	34.5	44.5	51.5	61.5	7	44.5	54.5	50	12	4	3	M6X1	22	2.8	9	-
40	43	53	7	36	46	53	63	7	46	56	58.5	12	4	3	M8X1.25	28	2.8	10	-

Bore \ Sign	O	P1	P3	P4	R	S	T1	T2	U	V	W	X	Y
12	M5X0.8	Double Side:Φ6.5 Thread:M5X0.8 Through Hole:Φ4.2	12	4.5	-	25	16.2	23	1.6	6	5	-	-
16	M5X0.8	Double Side:Φ6.5 Thread:M5X0.8 Through Hole:Φ4.2	12	4.5	-	29	19.8	28	1.6	6	5	-	-
20	M5X0.8	Double Side:Φ6.5 Thread:M5X0.8 Through Hole:Φ4.2	14	4.5	2	34	24	-	2.1	8	6	11.3	10
25	M5X0.8	Double Side:Φ8.2 Thread:M6X1.0 Through Hole:Φ4.6	15	5.5	2	40	28	-	3.1	10	8	12	10
32	G1/8	Double Side:Φ8.5 Thread:M6X1.0 Through Hole:Φ4.6	16	5.5	6	44	34	-	2.15	12	10	18.3	15
40	G1/8	Double Side:Φ10 Thread:M8X1.25 Through Hole:Φ6.5	20	7.5	6.5	52	40	-	2.25	16	14	21.3	16

SDA Series Compact Cylinder

Main Dimensions STA/STAS(Single Acting Spring Return)

Φ12-Φ16

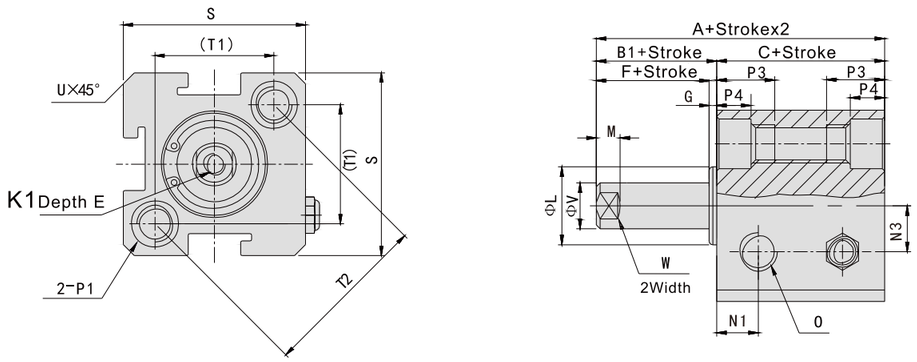

Φ20-Φ40

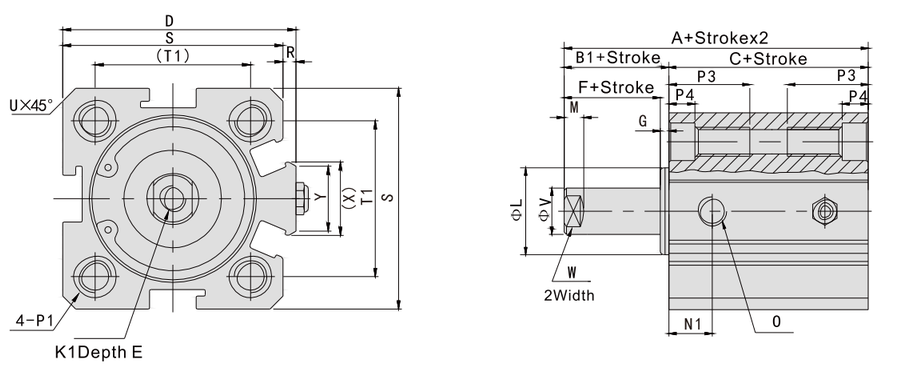

Model	Standard					With Magnet					D	E	F	G	K1	L	M	N1	N3
Bore/Sign Stroke	A		B1	C		A		B1	C										
	≤10	>10		≤10	>10	≤10	>10		≤10	>10									
12	32	42	5	27	37	42	52	5	37	47	–	6	4	1	M3X0.5	10.2	2.8	6.3	6
16	34	44	5.5	28.5	38.5	44	54	5.5	38.5	48.5	–	6	4	1.5	M3X0.5	11	2.8	7.3	6.5
20	35	45	5.5	29.5	39.5	45	55	5.5	39.5	49.5	36	8	4	1.5	M4X0.7	15	2.8	7.5	-
25	37	47	6	31	41	47	57	6	41	51	42	10	4	2	M5X0.8	17	2.8	8	-
32	41.5	51.5	7	34.5	44.5	51.5	61.5	7	44.5	54.5	50	12	4	3	M6X1	22	2.8	9	-
40	43	53	7	36	46	53	63	7	46	56	58.5	12	4	3	M8X1.25	28	2.8	10	-

Bore/Sign	O	P1	P3	P4	R	S	T1	T2	U	V	W	X	Y
12	M5X0.8	Double Side: Φ6.5 Thread: M5X0.8 Through Hole: Φ4.2	12	4.5	–	25	16.2	23	1.6	6	5	–	–
16	M5X0.8	Double Side: Φ6.5 Thread: M5X0.8 Through Hole: Φ4.2	12	4.5	–	29	19.8	28	1.6	6	5	–	–
20	M5X0.8	Double Side: Φ6.5 Thread: M5X0.8 Through Hole: Φ4.2	14	4.5	2	34	24	–	2.1	8	6	11.3	10
25	M5X0.8	Double Side: Φ8.2 Thread: M6X1.0 Through Hole: Φ4.6	15	5.5	2	40	28	–	3.1	10	8	12	10
32	G1/8	Double Side: Φ8.2 Thread: M6X1.0 Through Hole: Φ4.6	16	5.5	6	44	34	–	2.15	12	10	18.3	15
40	G1/8	Double Side: Φ10 Thread: M8X1.25 Through Hole: Φ6.5	20	7.5	6.5	52	40	–	2.25	16	14	21.3	16

SDA Series Compact Cylinder

Main Dimensions SDA SSA STA

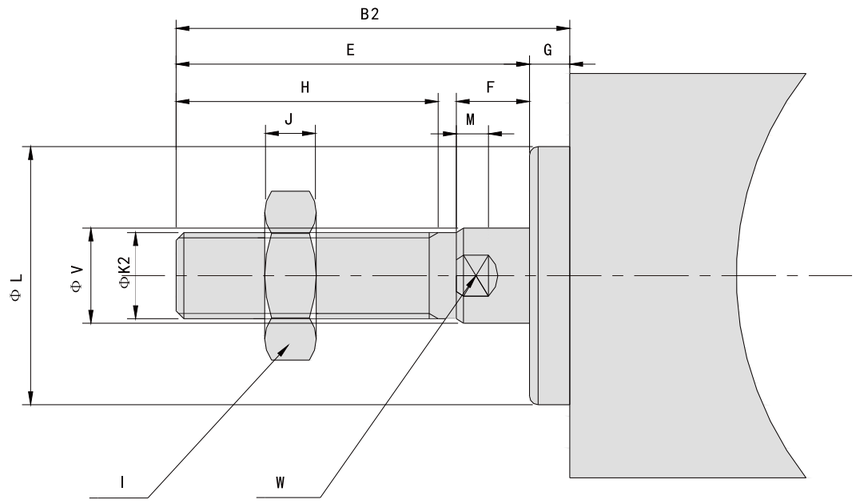

Bore/Sign	B2	E	F	G	H	I	J	K2	L	M	V	W
12	17	16	4	1	10	8	4	M5X0.8	10.2	2.8	6	5
16	17.5	16	4	1.5	10	8	4	M5X0.8	11	2.8	6	5
20	20.5	19	4	1.5	13	10	5	M6X1.0	15	2.8	8	6
25	23	21	4	2	15	12	6	M8X1.25	17	2.8	10	8
32	25	22	4	3	15	17	6	M10X1.25	22	2.8	12	10
40	35	32	4	3	25	19	8	M14X1.5	28	2.8	16	14
50	37	33	5	4	25	27	11	M18X1.5	38	2.8	20	17
63	37	33	5	4	25	27	11	M18X1.5	40	2.8	20	17
80	44	39	6	5	30	32	13	M22X1.5	45	4	25	22
100	50	45	7	5	35	36	13	M26X1.5	55	4	32	27

SDA Series Compact Cylinder

Main Dimensions SDAD/SDADS (Double Shaft Acting Adjustable Type)

Φ12-Φ16

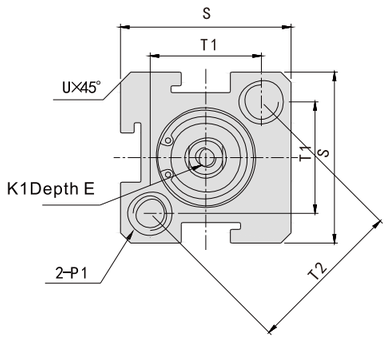

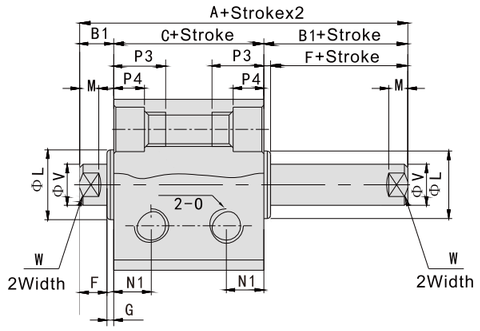

Φ20-Φ100

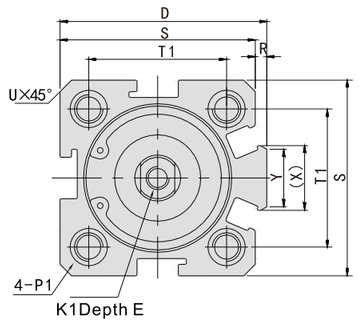

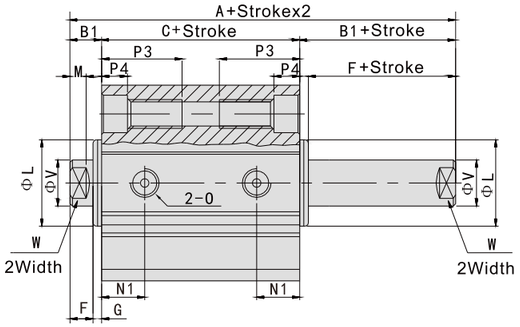

Model	Standard			With Magnet			D	E		F	G	K1	L	M	N1		N3
Bore/Sign	A	B1	C	A	B1	C		S≤10	S>10						S=5	S>5	
12	27	5	17	37	5	27	-	6		4	1	M3X0.5	10.2	2.8	6.3		6
16	29.5	5.5	18.5	39.5	5.5	28.5	-	6		4	1.5	M3X0.5	11	2.8	7.3		6.5
20	30.5	5.5	19.5	40.5	5.5	29.5	36	8(S=5 6.5)		4	1.5	M4X0.7	15	2.8	7.5		-
25	33	6	21	43	6	31	42	10(S=5 7)		4	2	M5X0.8	17	2.8	8		-
32	38.5	7	24.5	48.5	7	34.5	50	8	12	4	3	M6X1	22	2.8	9		-
40	40	7	26	50	7	36	58.5	8	12	4	3	M8X1.25	28	2.8	10		-
50	46	9	28	56	9	38	71.5	8	15	5	4	M10X1.5	38	2.8	10.5		-
63	50	9	32	60	9	42	84.5	10	15	5	4	M10X1.5	40	2.8	9.5	11.8	-
80	63	11	41	73	11	51	104	13	20	6	5	M14X1.5	45	4	11.5	14.5	-
100	75	12	51	85	12	61	124	18	20	7	5	M18X1.5	55	4	16	20.5	-

Bore/Sign	O	P1	P3	P4	R	S	T1	T2	U	V	W	X	Y
12	M5X0.8	Double Side: Φ6.5 Thread:M5X0.8 Through Hole:Φ4.2	12	4.5	-	25	16.2	23	1.6	6	5	-	-
16	M5X0.8	Double Side: Φ6.5 Thread:M5X0.8 Through Hole:Φ4.2	12	4.5	-	29	19.8	28	1.6	6	5	-	-
20	M5X0.8	Double Side: Φ6.5 Thread:M5X0.8 Through Hole:Φ4.2	14	4.5	2	34	24	-	2.1	8	6	11.3	10
25	M5X0.8	Double Side: Φ8.2 Thread:M6X1.0 Through Hole:Φ4.6	15	5.5	2	40	28	-	3.1	10	8	12	10
32	G1/8	Double Side: Φ8.2 Thread:M6X1.0 Through Hole:Φ4.6	16	5.5	6	44	34	-	2.15	12	10	18.3	15
40	G1/8	Double Side: Φ10 Thread:M8X1.25 Through Hole:Φ6.5	20	7.5	6.5	52	40	-	2.25	16	14	21.3	16
50	G1/4	Double Side: Φ11 Thread:M8X1.25 Through Hole:Φ6.5	25	8.5	9.5	62	48	-	4.15	20	17	30	20
63	G1/4	Double Side: Φ11 Thread:M8X1.25 Through Hole:Φ6.5	25	8.5	9.5	75	60	-	3.15	20	17	28.7	20
80	G3/8	Double Side: Φ14 Thread:M12X1.75 Through Hole:Φ9.2	25	10.5	10	94	74	-	3.65	25	22	36	26
100	G3/8	Double Side: Φ17.5 Thread:M14X2 Through Hole:Φ11.3	30	13	10	114	90	-	3.65	32	27	35	26

VPC PNEUMATIC®
ISO9001 CE

SDA Series Compact Cylinder

Main Dimensions SDAJ/SDAJS (Double Shaft Adjustable Stroke Type)

Φ12-Φ16

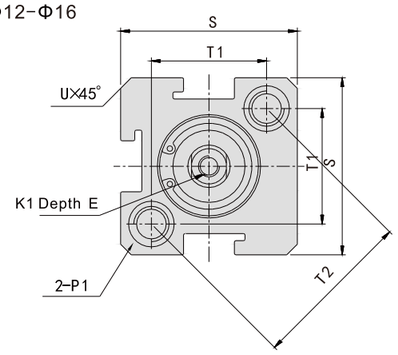

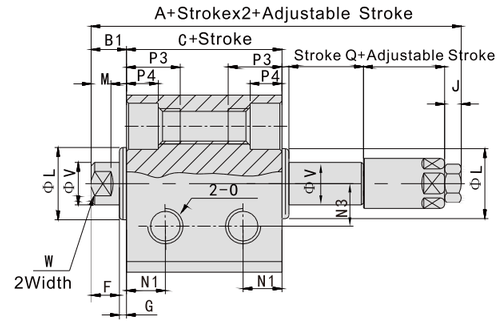

Φ20-Φ100

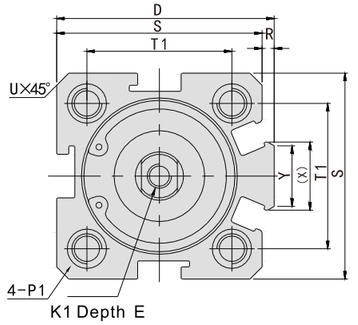

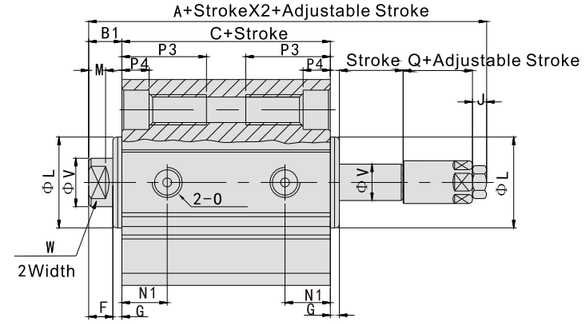

Model	Standard			With Magnet			D	E		F	G	J	K1	L	M	N1	
Bore/Sign	A	B1	C	A	B1	C		S≤10	S>10							S=5	S>5
12	40	5	17	50	5	27	-	6		4	1	4	M3X0.5	10.2	2.8	6.3	
16	42.5	5.5	18.5	52.5	5.5	28.5	-	6		4	1.5	4	M3X0.5	11	2.8	7.3	
20	47.5	5.5	19.5	57.5	5.5	29.5	36	8(S=5 6.5)		4	1.5	5	M4X0.7	15	2.8	7.5	
25	55	6	21	65	6	31	42	10(S=5 7)		4	2	6	M5X0.8	17	2.8	8	
32	61.5	7	24.5	71.5	7	34.5	50	8	12	4	3	6	M6X1	22	2.8	9	
40	65	7	26	75	7	36	58.5	8	12	4	3	8	M8X1.25	28	2.8	10	
50	73	9	28	83	9	38	71.5	8	15	5	4	11	M10X1.5	38	2.8	10.5	
63	77	9	32	87	9	42	84.5	10	15	5	4	11	M10X1.5	40	2.8	9.5	11.8
80	94	11	41	104	11	51	104	13	20	6	5	13	M14X1.5	45	4	11.5	14.5
100	105	12	51	115	12	61	124	18	20	7	5	13	M18X1.5	55	4	16	20.5

Bore/Sign	N3	O	P1		P4	Q	R	S	T1	T2	U	V	W	X	Y
12	6	M5X0.8	Double Side:Φ6.5 Thread: M5X0.8 Through Hole:Φ4.2	12	4.5	13	-	25	16.2	23	1.6	6	5	-	-
16	6.5	M5X0.8	Double Side:Φ6.5 Thread: M5X0.8 Through Hole:Φ4.2	12	4.5	13	-	29	19.8	28	1.6	6	5	-	-
20	-	M5X0.8	Double Side:Φ6.5 Thread: M5X0.8 Through Hole:Φ4.2	14	4.5	16	2	34	24	-	2.1	8	6	11.3	10
25	-	M5X0.8	Double Side:Φ8.2 Thread: M6X1.0 Through Hole:Φ4.6	15	5.5	19	2	40	28	-	3.1	10	8	12	10
32	-	G1/8	Double Side:Φ8.2 Thread: M6X1.0 Through Hole:Φ4.6	16	5.5	21	6	44	34	-	2.15	12	10	18.3	15
40	-	G1/8	Double Side:Φ10 Thread: M8X1.25 Through Hole:Φ6.5	20	7.5	21	6.5	52	40	-	2.25	16	14	21.3	16
50	-	G1/4	Double Side:Φ11 Thread: M8X1.25 Through Hole:Φ6.5	25	8.5	21	9.5	62	48	-	4.15	20	17	30	20
63	-	G1/4	Double Side:Φ11 Thread: M8X1.25 Through Hole:Φ6.5	25	8.5	21	9.5	75	60	-	3.15	20	17	28.7	20
80	-	G3/8	Double Side:Φ14 Thread: M12X1.75 Through Hole:Φ9.2	25	10.5	24	10	94	74	-	3.65	25	22	36	26
100	-	G3/8	Double Side:Φ17.5 Thread: M14X2 Through Hole:Φ11.3	30	13	24	10	114	90	-	3.65	32	27	35	26

CQ2 Series Compact Cylinder







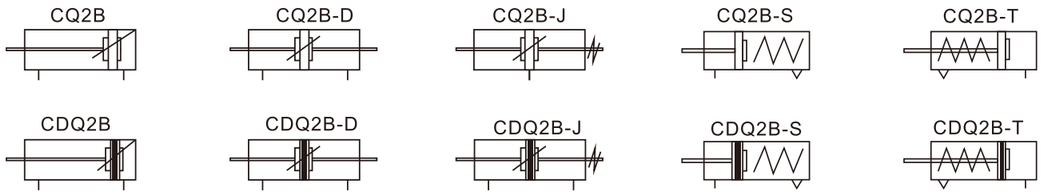

Ordering Code CQ2 Series Compact Cylinder

C □Q2 B 12 X 10 - D M

- Magnet: Blank : Without Magnet; D:With Magnet
- Mounting: B:Through hole; A:Female thread at both ends
- Bore: Double Acting:12~100MM; Spring Acting:12~50MM
- Stroke
- Acting: Blank:Double acting; S:Single acting spring extent; T:Single acting spring return; D:Double shaft double acting; J:Double shaft double acting adjustable
- Thread Type: Blank:Female thread on piston rod; M:Male thread on piston rod

Specifications

Bore(mm)	12	16	20	25	32	40	50	63	80	100
Working Medium	Clean air(40μm Filteration)									
Acting Type	Double Single acting spring extent/Single acting spring reurn									
Guaranteed Pressure	1.5Mpa									
Max. Working Pressure	1.0Mpa									
Working Temperature	5~60℃									
Thread on Piston Rod	Female thread(Standard),Male thread(Optional)									
Tolerance of Stroke	+1.0 mm 0									
Lubrication	Not Required									
Installation	Through hole(Standard),Female thread on both sides(Optional)									
Port size	M5X0.8			G1/8		G1/4			G3/8	

Main Dimensions Double acting/Single acting Through Hole/CQ2B

Φ12-Φ25

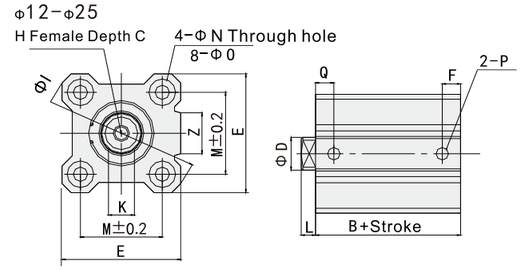

Φ32-Φ100

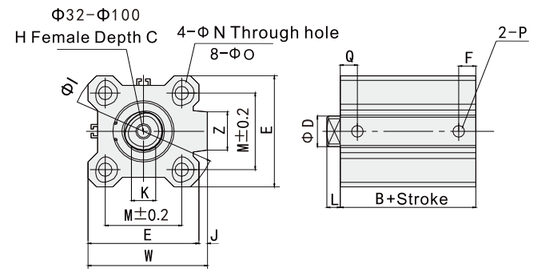

Double Acting

Bore	Stroke	B	ΦD	E	F	H	C	ΦI	J	K	L	M	ΦN	ΦO	P	Q	W	Z
12	5~30	17	6	25	5	M3*0.5	6	32	–	5	3.5	15.5	3.5	6.5Depth3.5	M5*0.8	7.5	–	–
16	5~30	18.5	8	29	5.5	M4*0.7	8	38	–	6	3.5	20	3.5	6.5Depth3.5	M5*0.8	8	–	10
20	5~50	19.5	10	36	5.5	M5*0.8	7	47	–	8	4.5	25.5	5.5	9Depth7	M5*0.8	9	–	10
25	5~50	22.5	12	40	5.5	M6*1.0	12	52	–	10	5	28	5.5	9Depth7	M5*0.8	11	–	10
32	5 10~50	23	16	45	5.5 7.5	M8*1.25	13	60	4.5	14	7	34	5.5	9Depth7	M5*0.8 1/8	11.5 10.5	49.5	14
40	5~50	29.5	16	52	8	M8*1.25	13	69	5	14	7	40	5.5	9Depth7	1/8	11	57	14
50	10~50	30.5	20	64	10.5	M10*1.5	15	86	7	17	8	50	6.6	11Depth8	1/4	10.5	71	19
63	10~50	36	20	77	10.5	M10*1.5	15	103	7	17	8	60	9	14Depth10. 5	1/4	15	84	19
80	10~50	43.5	25	98	12.5	M16*2.0	21	132	6	22	10	77	11	17.5Depth13.5	3/8	16	104	26
100	10~50	53	30	117	13	M20*2.5	27	156	6.5	27	12	94	11	17.5Depth13.5	3/8	23	123.5	26

Note2)Long Stroke

Bore	Stroke(MM)	B	F	P	Q
32	75,100	33	7.5	1/8	10.5
40	75,100	39.5	8	1/8	11
50	75,100	40.5	10.5	1/4	10.5

Bore	Stroke(MM)	B	F	P	Q
63	75,100	46	10.5	1/4	15
80	75,100	53.5	12.5	3/8	16
100	75,100	63	13	3/8	23

Note1) Standard stroke is at 5mm interval;
Note2) The stroke is medium stroke between 55mm and 100mm(55, 60, 65, 70, 80, 85, 90, 95) plus5, 10, 15 or 20mm thick backing plate;
Note3) Unless specified, the dimensions of the model with through hole is the same as those of the model with female thread at both ends.

Single Acting

Bore	B			ΦD	E	F		H	C	ΦI	J	K	L	M	ΦN	ΦO	P			Q		W	Z
	5st	10st	20st			5st	10st										5st	10st	20st	5st	10st		
12	22	27	–	6	25	5	5	M3*0.5	6	32	–	5	3.5	15.5	3.5	6.5Depth3.5	M5*0.8		–	7.5	7.5	–	–
16	23.5	28.5	–	8	29	5.5	5.5	M4*0.7	8	38	–	6	3.5	20	3.5	6.5Depth3.5	M5*0.8		–	8	8	–	10
20	24.5	29.5	–	10	36	5.5	5.5	M5*0.8	7	47	–	8	4.5	25.5	5.5	9Depth7	M5*0.8		–	9	9	–	10
25	27.5	32.5	–	12	40	5.5	5.5	M6*1.0	12	52	–	10	5	28	5.5	9Depth7	M5*0.8		–	11	11	–	10
32	28	33	–	16	45	5.5	7.5	M8*1.25	13	60	4.5	14	7	34	5.5	9Depth7	M5*0.8	1/8	–	11.5	10.5	49.5	18
40	34.5	39.5	–	16	52	8	8	M8*1.25	13	69	5	14	7	40	5.5	9Depth7	1/8		–	11	11	57	18
50	–	40.5	50.5	20	64	10.5	10.5	M10*1.5	15	86	7	17	8	50	6.6	11Depth8	–	1/4		10.5	10.5	71	22

Male thread on piston rod

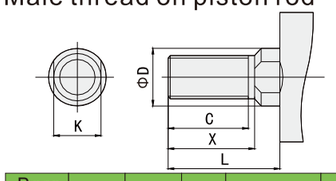

Bore (mm)	C	X	ΦD	H	L	K
12	9	10.5	6	M5*0.8	14	5
16	10	12	8	M6*1.0	15.5	6
20	12	14	10	M8*1.25	18.5	8
25	15	17.5	12	M10*1.25	22.5	10
32	20.5	23.5	16	M14*1.5	28.5	14
40	20.5	23.5	16	M14*1.5	28.5	14
50	26	28.5	20	M18*1.5	33.5	17
63	26	28.5	20	M18*1.5	33.5	17
80	32.5	35.5	25	M22*1.5	43.5	22
100	32.5	35.5	30	M26*1.5	43.5	27

Female thread at both ends

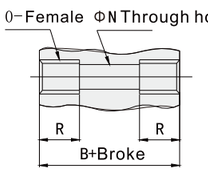

Bore (mm)	O	R
12	M4*0.7	7
16	M4*0.7	7
20	M6*1.0	10
25	M6*1.0	10
32	M6*1.0	10
40	M6*1.0	10
50	M8*1.25	14
63	M10*1.5	18
80	M12*1.75	22
100	M12*1.75	22

Single acting spring extent Φ12~Φ50

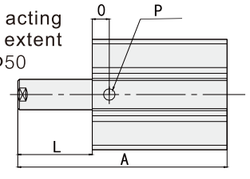

Bore (mm)	A			L		
	5st	10st	20st	5st	10st	20st
12	30.5	40.5	–	8.5	13.5	–
16	32	42	–	8.5	13.5	–
20	34	44	–	9.5	14.5	–
25	37.5	47.5	–	10	15	–
32	40	50	–	12	17	–
40	46.5	56.5	–	12	17	–
50	–	58.5	78.5	–	18	28

Note:Unless otherwise specified,the dimensions of model with through hole are the same as those of model with female thread at both ends

CQ2 Series Compact Cylinder

Main Dimensions

φ12-φ25

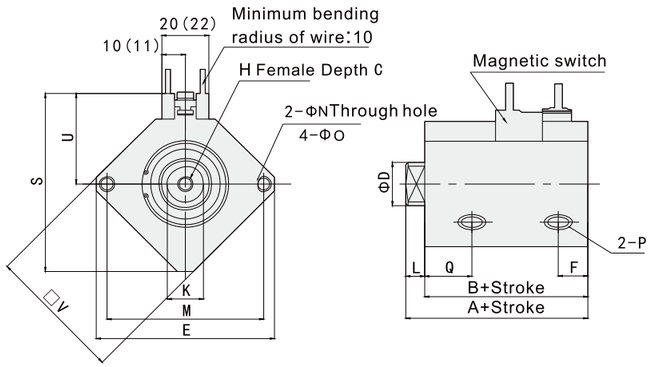

φ32-φ100

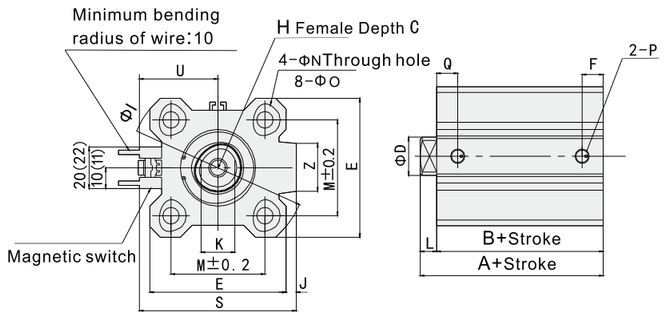

Both ends thrend hole: CDQ2B

Note3) Both ends thrend hole

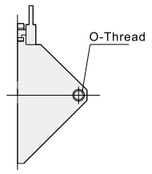

Bore (mm)	O	R
12	M4*0.7	7
16	M4*0.7	7
20	M6*1.0	10
25	M6*1.0	10
32	M6*1.0	10
40	M6*1.0	10
50	M8*1.25	14
63	M10*1.5	18
80	M12*1.75	22
100	M12*1.75	22

Male thread on piston rod

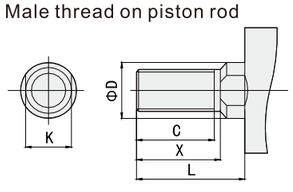

Male thread on piston rod

Bore (mm)	C	X	ΦD	H	L	K
12	9	10.5	6	M5*0.8	14	5
16	10	12	8	M6*1.0	15.5	6
20	12	14	10	M8*1.25	18.5	8
25	15	17.5	12	M10*1.25	22.5	10
32	20.5	23.5	16	M14*1.5	28.5	14
40	20.5	23.5	16	M14*1.5	28.5	14
50	26	28.5	20	M18*1.5	33.5	17
63	26	28.5	20	M18*1.5	33.5	17
80	32.5	35.5	25	M22*1.5	43.5	22
100	32.5	35.5	30	M26*1.5	43.5	27

Main Dimensions

Bore	Stroke Range	A	B	ΦD	E	F	H	C	ΦI	J	K	L	M	ΦN	ΦO	P	Q	S	U	V	Z
12	5~30	31.5	28	6	32	6.5	M3*0.5	6	–	–	5	3.5	22	3.5	6.5Depth3.5	M5*0.8	11	35.5	19.5	25	–
16	5~30	34	30.5	8	38	5.5	M4*0.7	8	–	–	6	3.5	28	3.5	6.5Depth3.5	M5*0.8	10	41.5	22.5	29	–
20	5~50	36	31.5	10	46.8	5.5	M5*0.8	7	–	–	8	4.5	36	5.5	9Depth7	M5*0.8	10.5	48	24.5	36	–
25	5~50	37.5	32.5	12	52	5.5	M6*1.0	12	–	–	10	5	40	5.5	9Depth7	M5*0.8	11	53.5	27.5	40	–
32	5~50	40	33	16	45	7.5	M8*1.25	13	60	4.5	14	7	34	5.5	9Depth7	1/8	10.5	58.5	31.5	–	18
40	5~50	46.5	39.5	16	52	8	M8*1.25	13	69	5	14	7	40	5.5	9Depth7	1/8	11	66	35	–	18
50	10~50	48.5	40.5	20	64	10.5	M10*1.5	15	86	7	17	8	50	6.6	11Depth8	1/4	10.5	80	41	–	22
63	10~50	54	46	20	77	10.5	M10*1.5	15	103	7	17	8	60	9	14Depth10.5	1/4	15	93	47.5	–	22
80	10~50	63.5	53.5	25	98	12.5	M16*2.0	21	132	6	22	10	77	11	17.5Depth13.5	3/8	16	112.5	57.5	–	26
100	10~50	75	63	30	117	13	M20*2.5	27	156	6.5	27	12	94	11	17.5Depth13.5	3/8	23	132.5	67.5	–	26

Note2) Long Stroke

Mode	Stroke (MM)	A	B	F	P	Q
32	75,100	40	33	7.5	1/8	10.5
40	75,100	46.5	39.5	8	1/8	11
50	75,100	48.5	40.5	10.5	1/4	10.5
63	75,100	54	46	10.5	1/4	15
80	75,100	63.5	53.5	12.5	3/8	16
100	75,100	75	63	13	3/8	23

Note1) Standard stroke is at 5mm interval.
Note2) The stroke is mudium stroke between 55mm and 100mm (55,60,65,70,80,85,90,95),plus 5,10,15 or 20mm thick backing plate.
Note3) Unless specified,the dimensions of the model with through hole is the same sa those of the model with female thread at both ends.
Note4) The 5mm stroke cylinder can only install 1pc magnetic switch.

ADVU Series Compact Cylinder





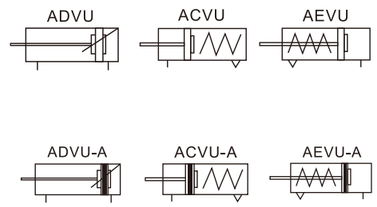

Ordering Code ADVU Series Compact Cylinder

ADVU 12 X 10 - 25 A B

- ADVU: Series Code
  - ADVU: Double Acting
  - AEVU: Spring Return
  - ACVU: Spring Extend
  - ADVUD: Double Shaft Acting
  - ADVUJ: Adjustable cushion type
- 12: Bore
- X: Stroke
- 10: Adjustable Stroke
- A: Magnet
  - Blank: Without Magnet
  - A: With Magnet
- B: Thread
  - Blank: Female Thread
  - B: Male Thread

Specifications

Bore (mm)		12	16	20	25	32	40	50	63	80	100
Working medium		Clean air(40μm Filteration)									
Acting type		Double Acting Spring Extend/Spring Return									
Pressure range	Double Acting	0.1~1.0Mpa									
	Spring Acting	0.2~1.0Mpa									
Guaranteed pressure		1.5Mpa									
Working Temperature		-5~70℃									
Speed range		Double Acting:30~500mm/s Spring Acting:50~500mm/s									
Tolerance of stroke		$0\sim150\ ^{+1.0}_{0}$ mm $>150\ ^{+1.4}_{0}$ mm									
Cushion type		Rubber Cushion									
Port size		M5X0.8				G1/8					G1/4

ADVU Series Compact Cylinder

Main Dimensions

ADVU

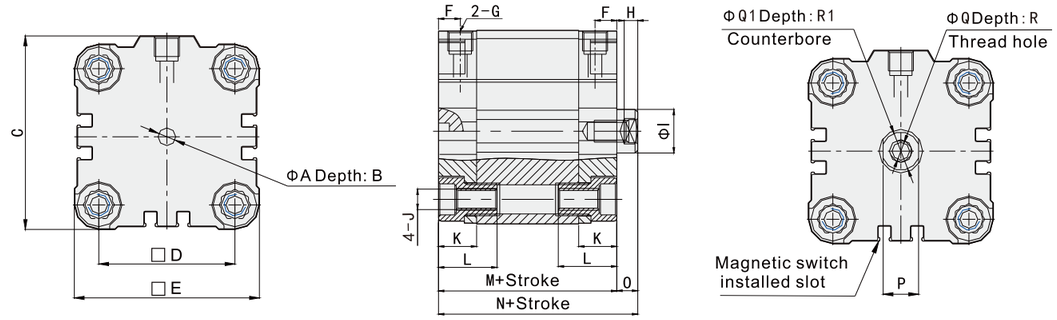

AEVU

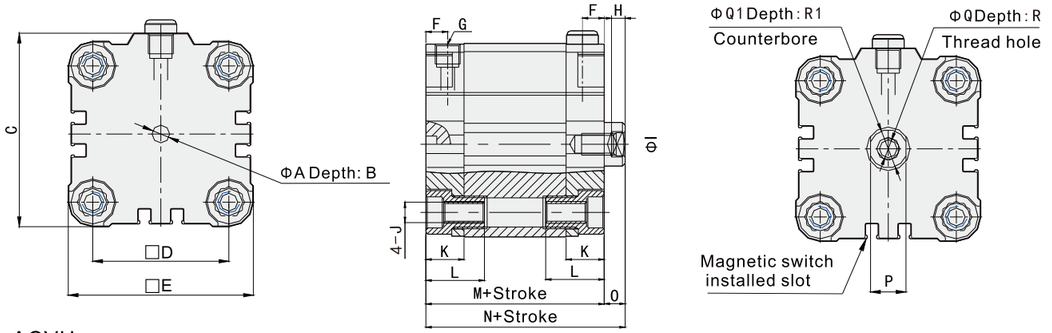

ACVU

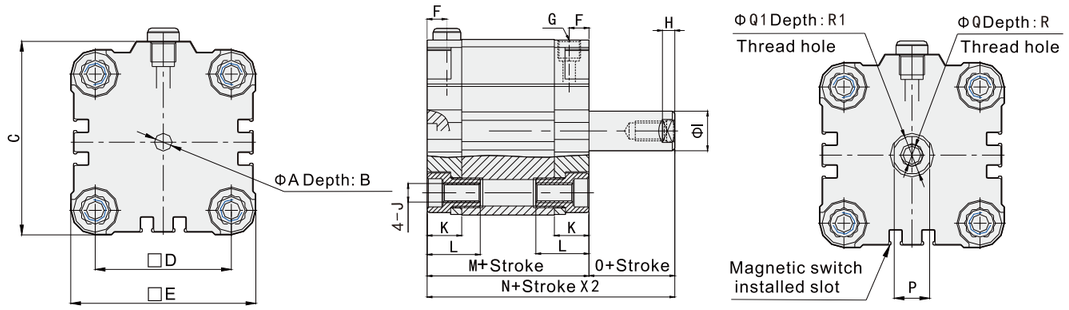

Bore / Sign	A	B	C	D	E	F	G	H	I	J	K	L	M	N	O	P	Q	Q1	R	R1
12	6	4	30	18	29	8	M5X0.8	3	6	M4X0.7	11.5	18	38	42.5	4.5	5	M3X0.5	3.3	8	1.5
16	6	4	30	18	29	8	M5X0.8	3	8	M4X0.7	11.5	18	38	42.5	4.5	7	M4X0.7	4.5	10	1.5
20	6	4	37.5	22	36	8	M5X0.8	3	10	M5X0.8	11.5	18	38	42.5	4.5	9	M5X0.8	5.5	12	2
25	6	4	41.5	26	40	8	M5X0.8	4	10	M5X0.8	11.5	18	39.5	45	5.5	9	M5X0.8	5.5	12	2
32	6	4	52	32	50	8	G1/8	4.5	12	M6X1.0	14	21	44.5	50.5	6	32	M6X1.0	6.5	14	2.6
40	6	4	62.5	42	60	8	G1/8	4.5	12	M6X1.0	14	21	45.5	52	6.5	10	M6X1.0	6.5	14	2.6
50	6	4	71	50	68	8	G1/8	5	16	M8X1.25	14	22	45.5	53	7.5	10	M8X1.25	8.5	16	3.3
63	8	4	91	62	87	8	G1/8	5	16	M10X1.5	15	24	50	57.5	7.5	13	M8X1.25	8.5	16	3.3
80	8	4	111	82	107	8.5	G1/8	5.5	20	M10X1.5	16	27	56	64	8	17	M10X1.5	10.5	20	4.7
100	8.1	4	133	103	128	10.5	G1/8	7	25	M10X1.5	19	32	66.5	76.5	10	22	M12X17.5	12.5	24	6.1

CU Series Free Installation Cylinder

Ordering Code

CU Series Free Installation Cylinder

C□U □ 20 X 30 - D

- C□U — Magnet: Blank : Without Magnet; D: With Magnet
- □ — Blank: Basic type; K: No-Swivelling piston rod
- 20 — Bore
- 30 — Stroke
- D — Acting type: D: Double acting; S: Single acting spring extent; T: Single acting spring return





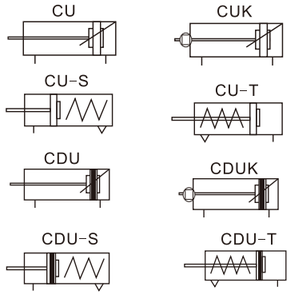

Specifications

Bore (mm)			6	10	16	20	25	32
Working medium			Clean air(40μm Filteration)					
Acting type			Double acting/Single acting					
Min. pressure (Mpa)	Double acting	Single piston rod	0.12	0.06		0.05		
		Double piston rod	0.15	0.10		0.08		
		Double piston rod	0.18	0.13		0.11		
	Single acting	Standard	0.20	0.15		0.13		
		Non-rotating	0.23	0.18		0.16		
Max.pressure			0.7Mpa					
Working temperature			5~60℃					
Cushion type			Rubber cushion					
Tolerance of stroke(mm)			+0.1 0					
Lubrication			Not required					
Installation			Free					
Non-rotating accuracy			±0.8°			±0.5°		
Port size			M5X0.8				G1/8	

Main Dimensions

Φ6-Φ10

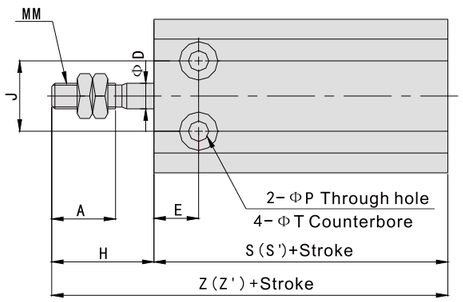

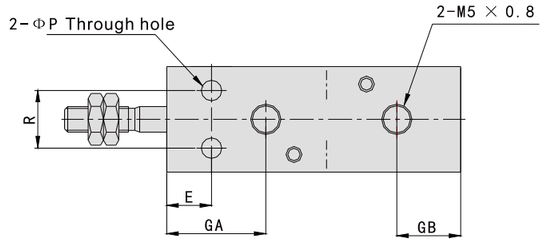

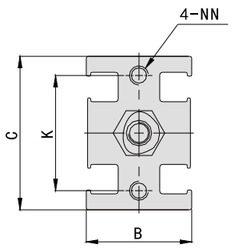

CU Series Free Installation Cylinder

Main Dimensions

Φ16-Φ25

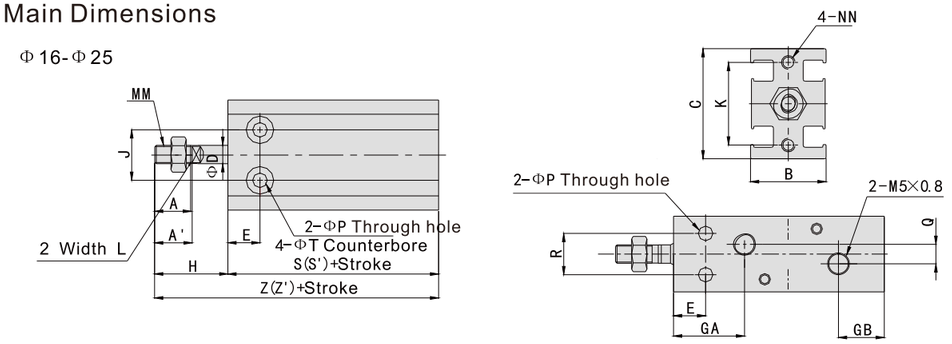

Φ32

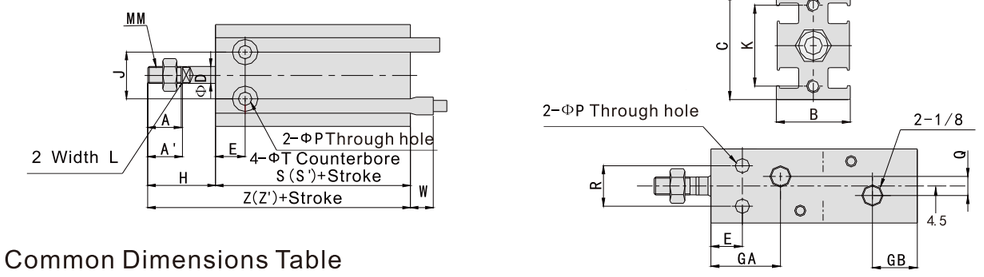

Common Dimensions Table

Model	A	A1	B	C	ΦD	E	GA	GB	J	K	L	MM	NN	ΦP	Q	R	ΦT
C□U6	7	-	13	22	3	7	14.5	10	10	17	-	M3X0.5	M3X0.5Depth5	3.2	—	7	6Depth4.8
C□U10	10	-	15	24	4	7	15.5	10	11	18	-	M4X0.7	M3X0.5Depth5	3.2	—	9	6Depth5
C□U16	11	12.5	20	32	6	7	16.5	11.5	14	25	5	M5X0.8	M4X0.7Depth6	4.5	4	12	7.6Depth6.5
C□U20	12	14	26	40	8	9	19	12.5	16	30	6	M6X1.0	M5X0.8Depth8	5.5	9	16	9.3Depth8
C□U25	15.5	18	32	50	10	10	21.5	13	20	38	8	M8X1.25	M5X0.8Depth8	5.5	9	20	9.3Depth9
C□U32	19.5	22	40	62	12	11	23	13	24	48	10	M10X1.25	M6X1.0Depth9	6.6	13.5	24	11Depth11.5

Double Acting

Model	H	Standard		With Magnet		
		S	Z	W	S'	Z'
C□U6-□D	13	33	46	2.5	33	46
C□U10-□D	16	36	52	1	36	52
C□U16-□D	16	30	46	0	40	56
C□U20-□D	19	36	55	1	46	65
C□U25-□D	23	40	63	-1	50	73
C□U32-□D	27	42	69	-4	52	79

Single Acting(With spring Return)

Model	H	Standard						W	With Magnet					
		S			Z				S'			Z'		
		5st	10st	15st	5st	10st	15st		5st	10st	15st	5st	10st	15st
C□U6-□S	13	38	43	48	51	56	61	2.5	38	43	48	51	56	61
C□U10-□S	16	41	46	56	57	62	72	1	41	46	56	57	62	72
C□U16-□S	16	35	40	50	51	56	66	0	45	50	60	61	66	76
C□U20-□S	19	41	46	56	60	65	75	1	51	56	66	70	75	85
C□U25-□S	23	45	50	60	68	73	83	-1	55	60	70	78	83	93
C□U32-□S	27	47	52	62	74	79	89	-4	57	62	72	84	89	99

Single Acting(With spring Extend)

Model	H			Standard						W	With Magnet					
				S			Z				S'			Z'		
	5st	10st	15st	5st	10st	15st	5st	10st	15st		5st	10st	15st	5st	10st	15st
C□U6-□T	18	23	28	38	43	48	56	66	76	2.5	38	43	48	56	66	76
C□U10-□T	21	26	31	41	46	56	62	72	87	1	41	46	56	62	72	87
C□U16-□T	21	26	31	45	50	60	66	76	91	0	45	50	60	66	76	91
C□U20-□T	24	29	34	41	46	56	65	75	90	1	51	56	66	75	85	100
C□U25-□T	28	33	38	45	50	60	73	83	98	-1	55	60	70	83	93	108
C□U32-□T	32	37	42	47	52	62	79	89	104	-4	57	62	72	89	99	114

TN Series Double-shaft Cylinder

Ordering Code TN Series Double-shaft Cylinder

TN 20 X 50 - S

- 20 — Bore
- 50 — Stroke
- S — Magnet
  - Blank : Without Magnet
  - S:With Magnet

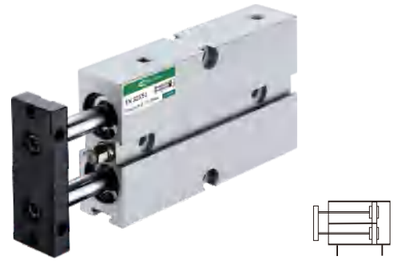

Specifications

Bore (mm)	10	16	20	25	32
Working medium	Clean air(40μm Filteration)				
Acting type	Double acting				
Working pressure range	0.1~0.9Mpa				
Guaranteed pressure	1.5Mpa				
Working temperature	-5~70℃				
Speed range	30~500mm/s				
Adjustable stroke	-10~0mm				
Cushion type	Rubber Cushion				
No rotating accuracy	0.4°	0.3°			
Port size	M5X0.8				G1/8

Main Dimensions

Front Plate

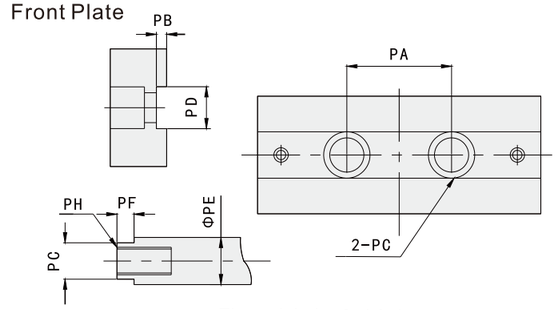

Bore/Sign	PA	PB	PC
10	18	0.7	Φ6.2X3.5Depth Through hole:Φ3.3
16	24	1	Φ7.8X4.6Depth Through hole:Φ4.3
20	28	1	Φ11X6.8Depth Through hole:Φ6.5
25	34	1	Φ11X6.8Depth Through hole:Φ6.5
32	42	2	Φ17X12Depth Through hole:Φ10.5

Bore/Sign	PD	PE	PF	PG	PG
10	5.2	6	2.2	5.1	M3X0.5 Depth5.5
16	6.2	8	3	6.1	M4X0.7 Depth9
20	8.2	10	3	8.1	M6X1 Depth10
25	10.2	12	3	10.1	M6X1 Depth10
32	14.2	16	3	14.1	M10X1.5 Depth13

Φ10

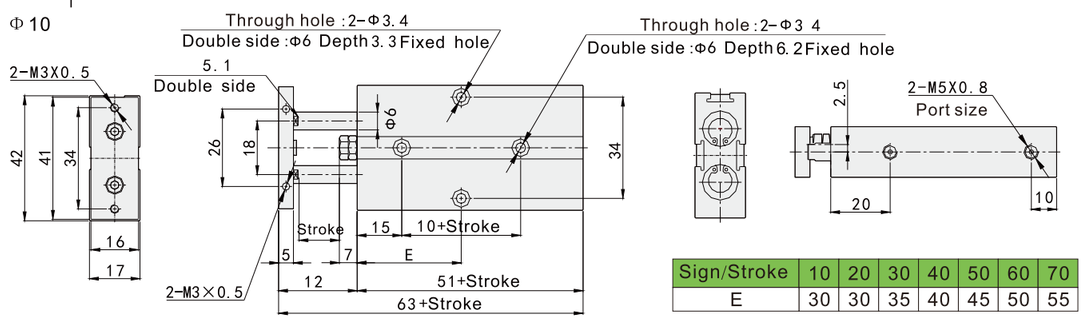

Sign/Stroke	10	20	30	40	50	60	70
E	30	30	35	40	45	50	55

TN Series Double-shaft Cylinder

Φ16-Φ25

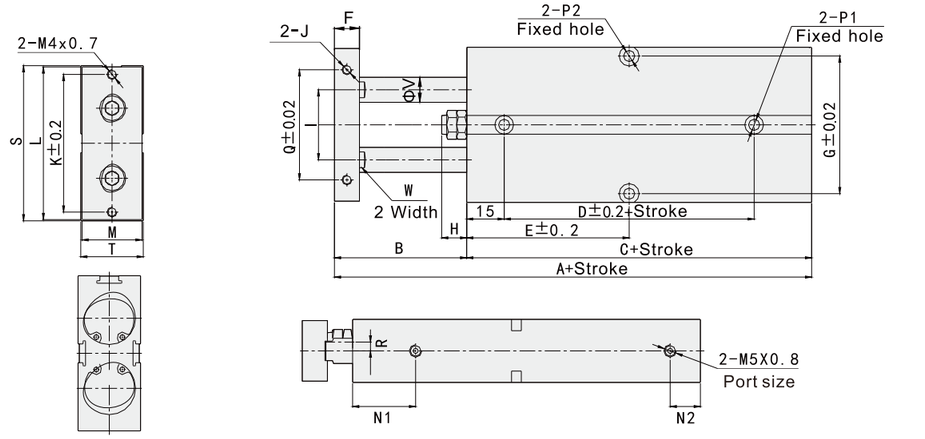

Bore/Sign	A	B	C	D	E(Stroke≤)											F	G	H	I	J	K	L	M	N1	N2
					10	20	30	40	50	60	70	80	90	100	125	150										
16	68	15	53	20	30	35	40	45	50	55	60	65	70	75	87.5	100	8	47	7	24	M4X0.7Depth5	47	53	20	22	11
20	78	20	58	20	35	35	40	45	50	55	60	65	70	75	87.5	100	10	55	10	28	M4X0.7Depth5	55	61	24	25	12
25	81	19	62	30	40	40	45	50	55	60	65	70	75	80	92.5	105	10	66	9	34	M4X0.7Depth6	66	72	29	27	12

Bore/Sign	P1(mm)	P2(mm)	Q	R	S	T	V	W
16	Double side: Φ7.5 Depth7.2,Through hole: Φ4.5	Double side:Φ8 Depth4.5mm,Through hole:Φ4.5	34	3	54	21	8	6.1
20	Double side: Φ7.5 Depth7.2,Through hole: Φ4.5	Double side:Φ8 Depth4.5mm,Through hole:Φ4.5	44	3.5	62	25	10	8.1
25	Double side: Φ7.5 Depth7.2,Through hole: Φ4.5	Double side:Φ8 Depth4.5mm,Through hole:Φ4.5	56	6	73	30	12	10.1

Φ32

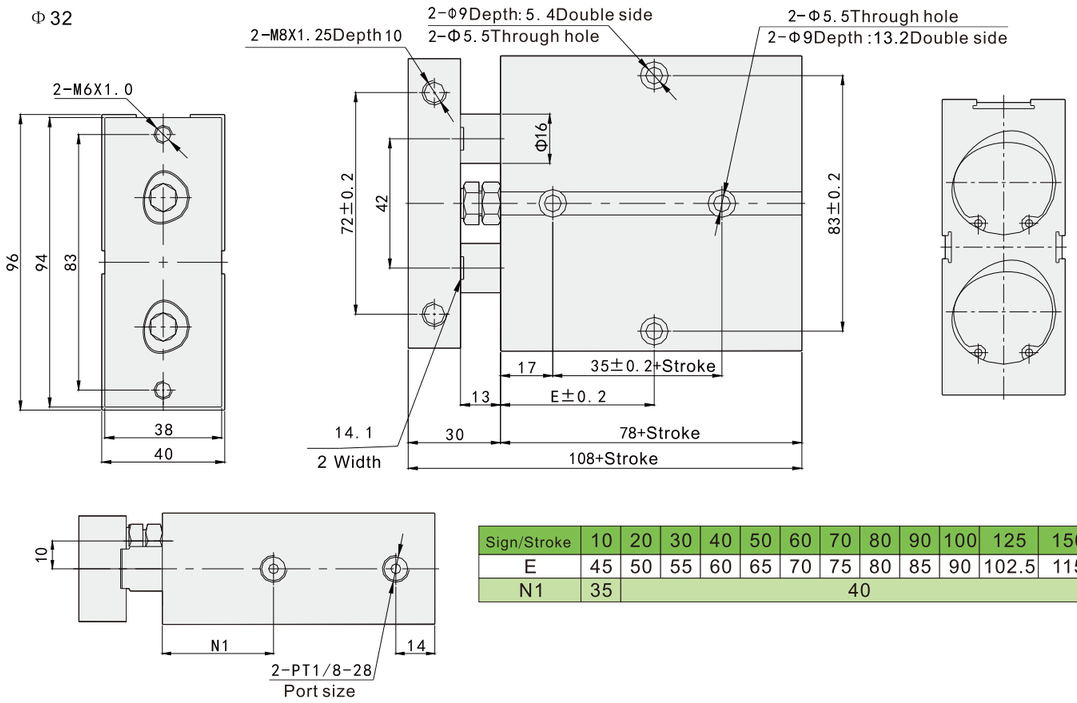

Sign/Stroke	10	20	30	40	50	60	70	80	90	100	125	150
E	45	50	55	60	65	70	75	80	85	90	102.5	115
N1	35	40										

CXS Series Double-shaft Cylinder

Ordering Code

CXS Series Double-shaft Cylinder

CXS M 20 X 50

- M: Bearing Type — M:Slide bearing type, L:Ball bearing type
- 20: Bore
- 50: Stroke

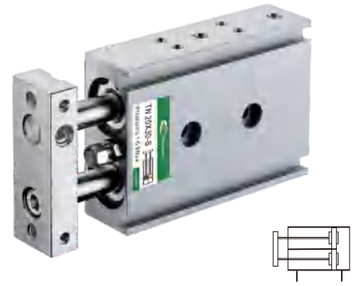

Specifications

Bore(mm)	6	10	15	20	25	32
Working medium	Clean air(25μm Filteration)					
Acting type	Double acting					
Working pressure range	0.1~1.0Mpa					
Guaranteed pressure	1.5Mpa					
Working temperature	-10~70℃					
Speed range	30~800mm/s					
Adjustable stroke	0~-5mm					
Cushion type	Rubber Cushion					
No rotating accuracy	±0.2°	±0.15°			±0.1°	
Port size	M5X0.8				G1/8	

Main Dimensions

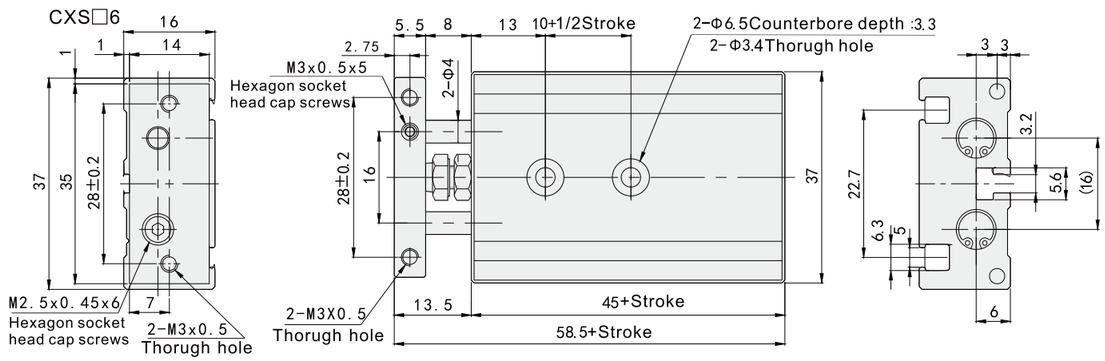

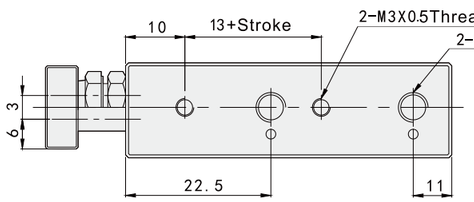

Model	Stroke	10+1/2Stroke	13+Stroke	45+Stroke	58.5+Stroke
CXS□6-10	10	15	23	55	68.5
CXS□6-20	20	20	33	65	78.5
CXS□6-30	30	25	43	75	88.5
CXS□6-40	40	30	53	85	98.5
CXS□6-50	50	35	63	95	108.5

CXS Series Double-shaft Cylinder

Main Dimensions

CXS□10 \ 15 \ 20 \ 25 \ 32

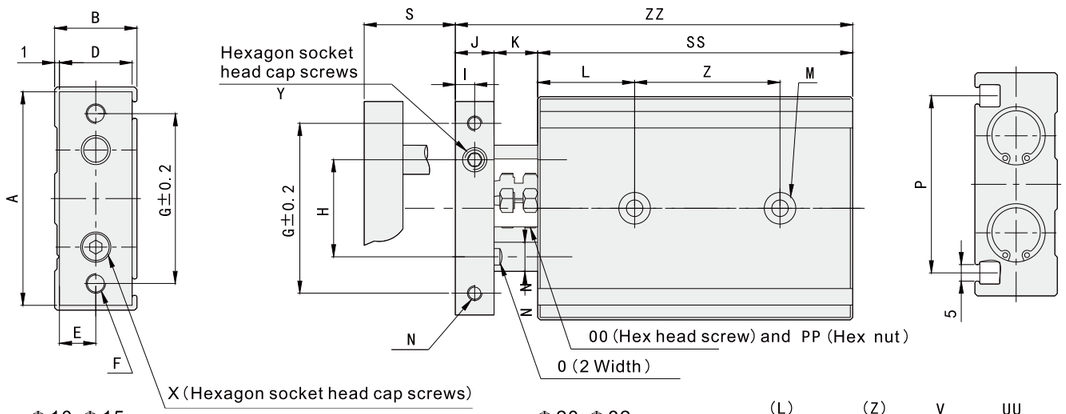

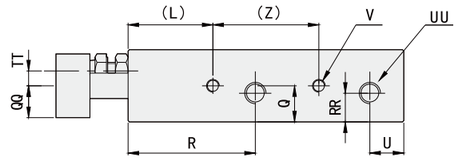

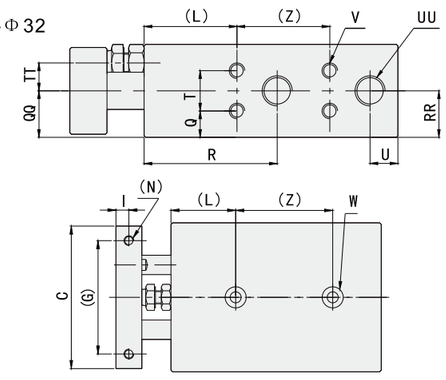

Model	A	B	C	D	E	F	G	H	I	J	K	L	M	N	NN	O	OO	P	PP	Q	QQ	R	RR	S	SS	T	TT	U	UU	V	W	X	Y	Z	ZZ
CXS□10-10	46	17	44	15	7.5	2-M4 x0. 7 Through hole	35	20	4	8	9	20	2-Φ3.4 Through hole 2-Φ6.5 Counterbore 3. 3	2-M3 x0. 5 Thread depth 5	Φ6	5	M4 x 0.7 x 14.5 L	33.6	M4 x 0.7	8.5	7	30	7	10	65	5	8	4-M5x0.8 Thread depth 4.5 (Port size)	4-M3x 0.5 Thread depth 4.5	2-M4 x0. 7 Thread depth 7	M3 x 0.5 x 10 L	M3 x 0.5 x 5 L	30	82
CXS□10-20																								20	75										92
CXS□10-30																								30	85								40		102
CXS□10-40																								40	95										112
CXS□10-50																								50	105										122
CXS□15-10	58	20	56	18	9	2-M5 x0. 8 Through hole	45	25	5	10	9	30	2-Φ4.3 Through hole 2-Φ8 Counterbore 4. 4	2-M4 x0. 7 Thread depth 6	Φ8	6	M4 x 0.7 x 14.5 L	48	M4 x 0.7	10	10	38.5	10	10	70	5	8	4-M5x0.8 Thread depth 4.5 (Port size)	4-M4x 0.7 Thread depth 5	2-M5 x0. 8 Thread depth 8	M5 x 0.8 x 10 L	M4 x 0.7 x 4 L	25	89
CXS□15-20																								20	80										99
CXS□15-30																								30	90								35		109
CXS□15-40																								40	100										119
CXS□15-50																								50	110										129
CXS□20-10	64	25	62	23	11.5	2-M5 x0. 8 Through hole	50	28	6	12	12	30	2-Φ5.5 Through hole 2-Φ9.5 Counterbore 5. 3	2-M4 x0. 7 Thread depth 6	Φ10	8	M6 x 1.0 x 18.5 L	53	M6 x 1.0	7.7	12.5	45	7.75	10	80	9.5	6.5	8	4-M5x0.8 Thread depth 4.5 (Port size)	8-M4x 0.7 Thread depth 6	2-M6 x1. 0 Thread depth 10	M6 x 1.0 x 12 L	M5 x 0.8 x 5 L	30	104
CXS□20-20																								20	90										114
CXS□20-30																								30	100								40		124
CXS□20-40																								40	110										134
CXS□20-50																								50	120										144
CXS□20-75																								75	145								60		169
CXS□20-100																								100	170										194
CXS□25-10	80	30	78	28	14	2-M6 x1. 0 Through hole	60	35	6	12	12	30	2-Φ6.9 Through hole 2-Φ11 Counterbore 6. 3	2-M5 x0. 8 Thread depth 7.5	Φ12	10	M6 x 1.0 x 18.5 L	64	M6 x 1.0	8.5	15	46	15	10	82	13	9	9	4-1/8 Thread depth 6.5 (Port size)	8-M5 x0.8 Thread depth 7.5	2-M8 x1. 25 Thread depth 12	M6 x 1.0 x 14 L	M6 x 1.0 x 5 L	30	106
CXS□25-20																								20	92										116
CXS□25-30																								30	102								40		126
CXS□25-40																								40	112										136
CXS□25-50																								50	122										146
CXS□25-75																								75	147								60		171
CXS□25-100																								100	172										196
CXS□32-10	98	38	96	36	18	2-M6 x1. 0 Through hole	75	44	8	16	14	30	2-Φ6.9 Through hole 2-Φ11 Counterbore 6. 3	2-M5 x0. 8 Thread depth 8	Φ16	13	M8 x 1.25 x 23 L	76	M8 x 1.25	9	19	56	19	10	92	20	11.5	10	4-1/8 Thread depth 6.5 (Port size)	8-M5 x0.8 Thread depth 7.5	2-M8 x1. 25 Thread depth 12	M8 x 1.25 x 16 L	M8 x 1.25 x 8 L	40	122
CXS□32-20																								20	102										132
CXS□32-30																								30	112								50		142
CXS□32-40																								40	122										152
CXS□32-50																								50	132										162
CXS□32-75																								75	157								70		187
CXS□32-100																								100	182										212

STM Series Slide Cylinder

Ordering Code

STM Series Slide Cylinder

S T M □ 20 X 50

- □: Fixed Type — B: Body fixed type; S: Slide block fixed type
- 20: Bore
- 50: Stroke

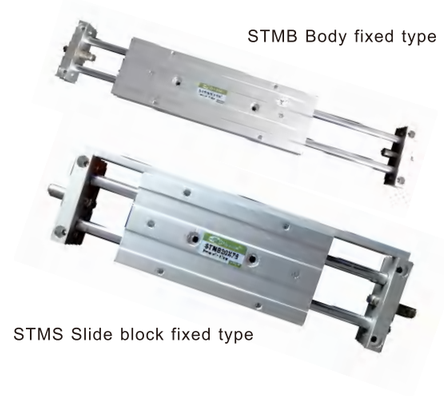

STMB Body fixed type

STMS Slide block fixed type

Performance

* Two type of fixed type&slide block fixed type;
* Double shaft provide good anti-bend performance and guarantee long life cycle and correct direction;
* Using the high temperature sealing material,guarantee a good condition under 150°C;
* Magnet is permanently mounted,which can trigger the magnetic switch to judge the movement position.



Specifications

Bore (mm)	10	16	20	25
Working medium	Clean air(25μm Filteration)			
Acting type	Double acting			
Working pressure range	0.1~1.0Mpa			
Guaranteed pressure	1.5Mpa			
Working temperature	−20~70℃			
Speed range	30~500mm/s			
Stroke Tolerance	+1.0 mm			
Cushion type	Shock absorber(Optional)			
No-rotating accuracy	±0.1°	±0.05°		
Port size	M5X0.8			G1/8

Stroke remark

Bore(mm)	Standard Stroke (mm)	Max.Stroke	Permit Stroke
10	25 50 75 100	100	150
16	25 50 75 100 125 150 175 200	200	250
20	25 50 75 100 125 150 175 200 250	250	300
25	25 50 75 100 125 150 175 200 250	250	300

IS09001 CE
PNEUMATIC®

STM Series Slide Cylinder

Main Dimensions

Φ10

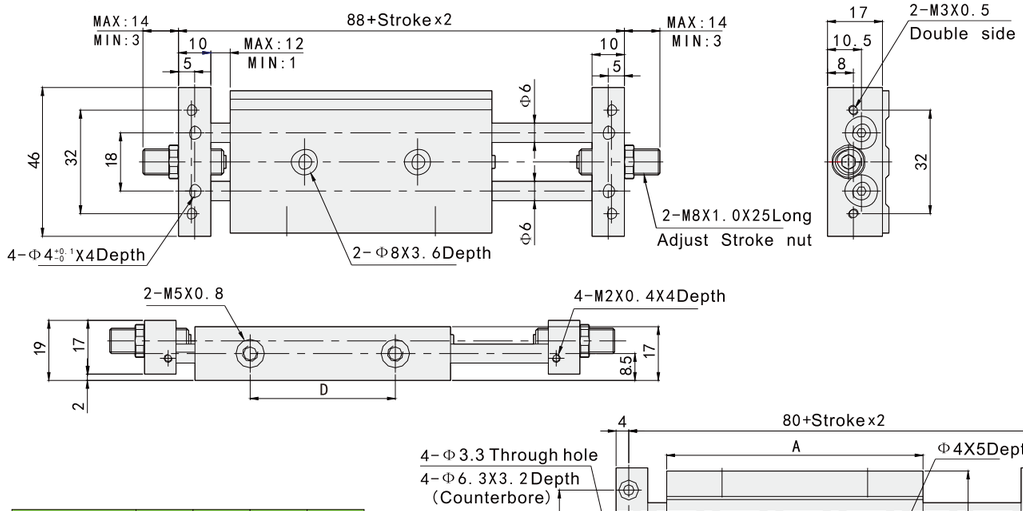

Sign/Stroke	25	50	75	100
A	81	106	131	156
B	65	85	85	85
C	35	60	60	60
D	46	71	96	121
E	15	40	40	40

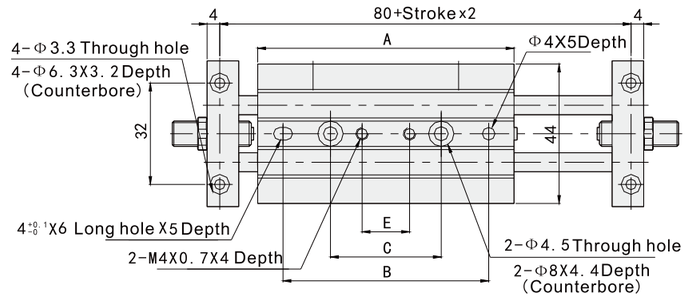

Φ16

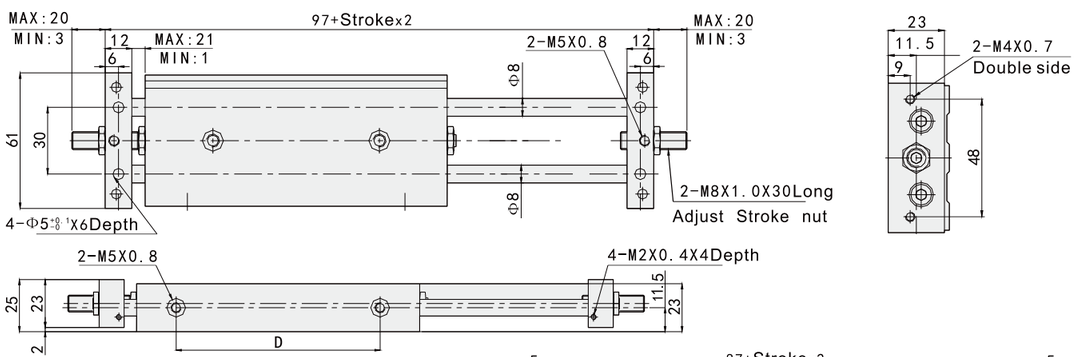

Sign/Stroke	A	B	C	D	E
25	86	55	-	48	25
50	111	80	-	73	40
75	136	105	75	98	45
100	161	130	100	123	70
125	186	150	120	148	90
150	211	150	120	173	90
175	236	150	120	198	90
200	261	150	120	223	90

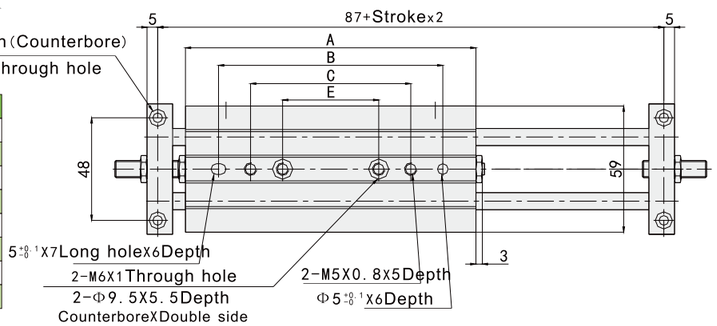

STM Series Slide Cylinder

Main Dimensions

Φ20

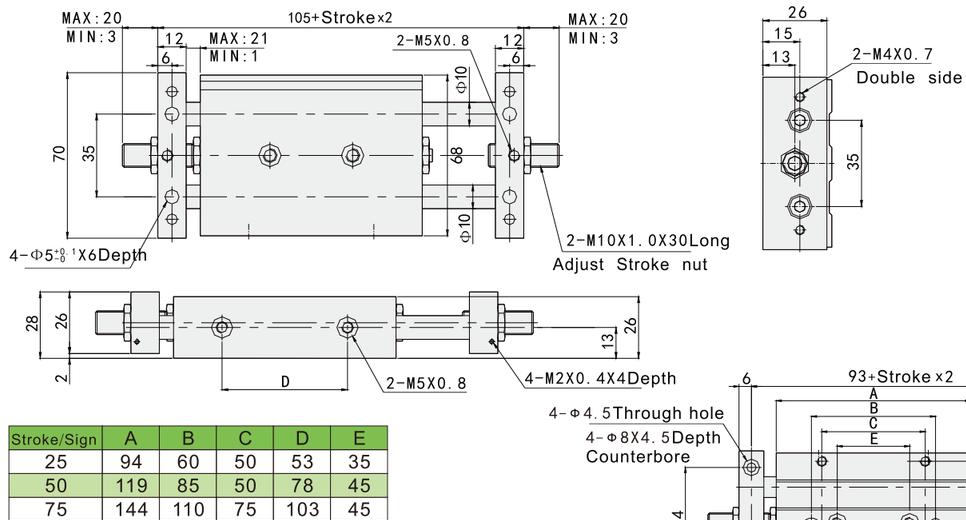

Stroke/Sign	A	B	C	D	E
25	94	60	50	53	35
50	119	85	50	78	45
75	144	110	75	103	45
100	169	135	100	128	70
125	194	150	120	153	90
150	219	150	120	178	90
175	244	150	120	203	90
200	269	150	120	228	90
250	319	150	120	278	90

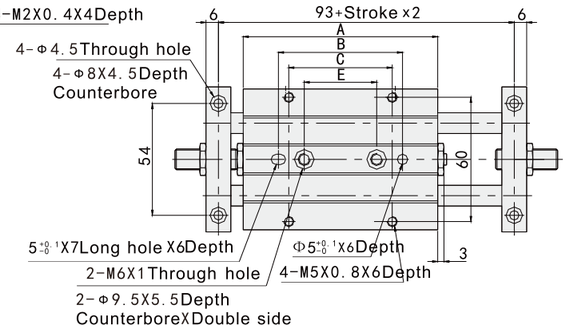

Φ25

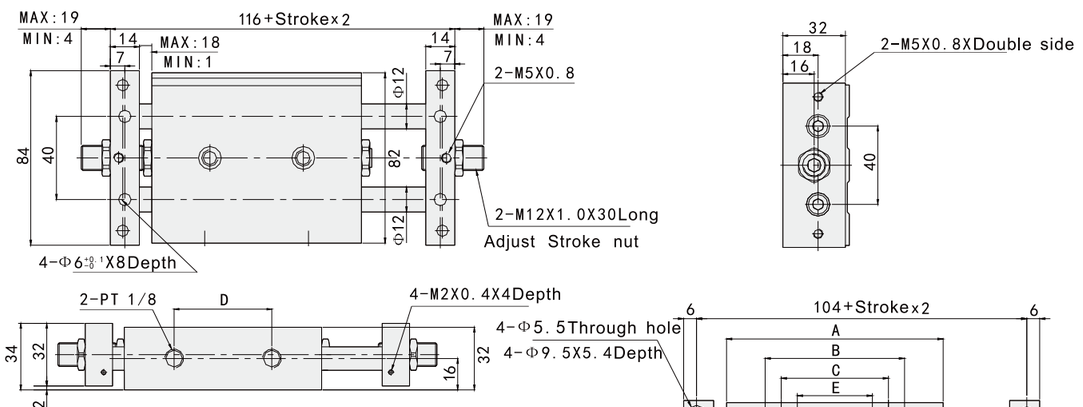

Stroke/Sign	A	B	C	D	E
25	101	65	50	50	35
50	126	90	50	75	45
75	151	115	75	100	45
100	176	140	100	125	70
125	201	140	100	150	95
150	226	140	100	175	100
175	251	140	100	200	100
200	276	140	100	225	100
250	326	140	100	275	100

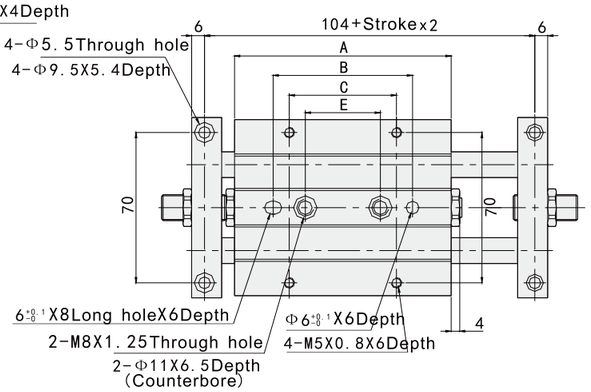

MXS Series Slide Cylinder

Ordering Code MXS Series Slide Cylinder

MXS 12 X 10 □ □

- 12 — Bore
- 10 — Stroke
- □ Adjuster Option
  - Blank: Without adjuster
  - AS: Adjuster on extension end
  - AT: Adjuster on retraction end
  - A: Adjuster on both ends
  - BS: Absorber on extension end
  - BT: Absorber on retraction end
  - B: Absorber on both ends
- □ Functional Option
  - Blank: Standard
  - F: With buffer
  - R: With end lock
  - P: Axial piping type
  - FR: With buffer and end lock
  - FP: With buffer, Axial piping type



Specifications

Model	MXS 6	MXS 8	MXS 12	MXS 16	MXS 20	MXS 25
Bore (mm)	Φ6x2 (equal to Φ8)	Φ8x2 (equal to Φ11)	Φ12x2 (equal to Φ17)	Φ16x2 (equal to Φ22)	Φ20x2 (equal to Φ28)	Φ25x2 (equal to Φ35)
Working medium	Clean air(40μm Filteration)					
Acting type	Double acting					
Max.Working Pressure	0.7Mpa					
Min.Working Pressure	0.15Mpa					
Working temperature	-10~60℃					
Speed of piston	50~500mm/s					
Lubrication	No					
Cushion type	Rubber Cushion					
Port size	M3x0.5	M5x0.8			G1/8	

CY1 Series Rodless Cylinder

Ordering Code CY1 Series Rodless Cylinder

C□Y 1 □ 25 x 100

- 25 — Bore
- 100 — Stroke
- □ Magnet
  - Blank: Without Magnet
  - D: With Magnet
- □ Cylinder Type
  - B: Basic type
  - S: Slide type



Bore (mm)	6	10	15	25	32	40	50	63
Acting type	Double acting							
Working medium	Clean air(40μm Filteration)							
Working temperature	-5~60℃							

Bore (mm)	6	10	15	25	32	40	50	63
Pressure range	0.18~0.71Mpa							
Guaranteed pressure	1.05Mpa							
Speed range	50~400mm/s							
Cushion type	Rubber Cushion							
Lubrication	No							
Port size	M5X0.8			G1/8			G1/4	

CXSW Series Double-shaft Cylinder

Ordering Code CXSW Series Double-shaft Cylinder

CXSW □ 25 x 40

- 25 — Bore
- 40 — Stroke
- □ Bearing Type
  - M: Slide bearing type
  - L: Ball bearing type



Specifications

Bore (mm)	6	10	15	20	25	32
Working medium	Clean air(40μm Filteration)					
Acting type	Double acting					
Max. Working Pressure	0.7Mpa					
Min.Working Pressure	0.15Mpa			0.1Mpa		
Cushion type	Rubber Cushion					
Working temperature	-5~60℃					
Speed of piston	50~500mm/s					
Stroke adjustable Range	0~-10mm/s					
Port size	M5X0.8			G1/8"		

CJP Series Needle Cylinder

Ordering Code CJP Series Needle Cylinder

CJP □ 10 x 15 - B

- □ Mounting Type
  - B: Plate Mounting Type
  - S: Inside-hiding Type
- 10 — Bore
  - 6: Φ6mm
  - 10: Φ10mm
  - 15: Φ15mm
- 15 — Stroke
- B — Thread type of Piston Rod
  - Blank: Male thread
  - B: No thread



Specifications

Bore (mm)	6	10	15
Working medium	Clean air(40μm Filteration)		
Acting type	Single acting spring return		
Pressure range	0.2~0.7Mpa	0.15~0.7Mpa	
Max. pressure	1.05Mpa		

Bore (mm)	6	10	15
Working temperature	-5~60℃		
Stroke Tolerance	$^{+1.0}_{0}$		
Port size	M5X0.8(Plate mounting type)		
Cushion type	No		

MSQ Series Rotary Table, Rack&Pinion Cylinder

Ordering Code MSQ Series Rotary Table, Rack&Pinion Cylinder

M S Q B 5 0 A

- B: Basic
- 50: Bore
- A: With adjustable angle screw
- R: With shock absorber



Specifications

Bore (mm)		10	20	30	50	70	100	200
Working medium		Clean air(40μm Filteration)						
Working pressure range		With adjustable angle screw:0.1~1.0Mpa,With shock absorber:0.1~0.6Mpa						
Cushion type		Cushion rubber cushion(Standard) / Shock absorber(Optional)						
Allowed power	With adjustable angle screw	0.007J	0.025J	0.048J	0.081J	0.24J	0.32J	0.56J
	With shock absorber	0.039J	0.116J		0.294J	1.1J	1.6J	2.9J
Angle adjustable range		0~190°						
Steady swing time range		A 0.2~1.0s/90°				0.2~1.5s/90°	0.2~2.0s/90°	0.2~2.5s/90°
		R 0.2~0.7s/90°				0.2~1.0s/90°		
Piston diameter		Φ15	Φ18	Φ21	Φ25	Φ28	Φ32	Φ40
Port size		M5X0.8		G1/8				

RSQ Series Stopper Cylinder

Ordering Code RSQ Series Stopper Cylinder

R S □ Q B 50 X 15 □ □

- Magnet: Blank:Without Magnet; D:With Magnet
- Mounting Type: B:Through hole; A:Both ends female thred
- Bore
- Stroke
- Acting Type: D:Double acting; B:Single acting with spring return; T:Single acting spring extent
- Rod end Type: Blank:Cylindrical type; K:Flat type; R:Roller type; L:Level type with cushion



Specifications

Bore (mm)		20	32	40	50
Working medium		Clean air(40μm Filteration)			
Acting type		Double acting、Single acting with spring return、Single acting spring extent			
Rod end Type		Round bar、Flat bar、Roller	Round bar、Flat bar、Roller、Level、Lever Roller Type		
Guaranteed pressure		1.0Mpa			
Working temperature		No magnet:-10~70℃ With magnet:-10~60℃			
Cushion type		Both ends rubber cushion			
Port size		G1/8″			

MGP Series Three-shaft Cylinder

Ordering Code MGP Series Three-shaft Cylinder

MGP □ 25 x 40

- Bearing Type: M:Slide beaing type; L:Ball bearing type
- Bore
- Stroke



Specifications

Bore (mm)		12	16	20	25	32	40	50	63	80	100
Working medium		Clean air(40μm Filteration)									
Acting type		Double acting									
Guaranteed pressure		1.5Mpa									
Working pressure range		0.12-1.0Mpa									
Bearing		Slide bearing/Ball bushing bearing									
Non-rotating accuacy	Slide bearing	±0.08°		±0.07°		±0.06°		±0.05°		±0.04°	
	Ball bushing bearing	±0.10°		±0.09°		±0.08°		±0.06°		±0.05°	
Port size		M5X0.8		G1/8				G 1/4		G3/8	

MHZ Series Style Air Cylinder

Ordering Code MHZ Series Style Air Cylinder

M H Z 2 25 D - □

- Finger: 2:2PCS
- Bore
- Acting type: D:Double acting; S:Single Acting(N. O.); C:Single Acting(N. C.)
- Dusty Seal Material: Blank:CR; F:FKM; S:SI



Specifications

Bore (mm)		6	10	16	20	25	32	40
Working medium		Clean air(40μm Filteration)						
Working temperature		-10~60℃						
Working pressure range (Mpa)	Double Acting	0.15~0.7	0.2~0.7	0.1~0.7			0.1~0.7	
	Single Acting	0.3~0.7	0.35~0.7	0.25~0.7			0.25~0.7	
Repeatability		±0.01					±0.02	
Max. acting frequency		180c.p.m					60c.p.m	
Lubrication		Not Required						
Port size		M3X0.5		M5X0.8				

MHL Series Parallel Style Wide Opening Air Cylinder

Ordering Code MHL Series Parallel Style Wide Opening Air Cylinder

M H L 2 - 2 5 D □

- Finger: 2:2PCS
- Bore
- Acting type: D: Double acting
- Finger Open/Close Stroke

Bore(mm)	Φ10	Φ16	Φ20	Φ25	Φ32	Φ40
Blank	20	30	40	50	70	100
1	40	60	80	100	120	160
2	60	80	100	120	160	200



Specifications

Bore (mm)	10	16	20	25	32	40
Working medium	Clean air(40μm Filteration)					
Guaranteed pressure	0.6Mpa					
Min.Working pressure	0.15Mpa	0.1Mpa				
Working temperature	-10~60℃					
Repeatability	±0.1mm					
Effective gripping force(N.M)	14	45	74	131	228	396
Port size	M5X0.8				G1/8	

MHT Series Angle Style Air Gripper Toggle Type

Ordering Code MHT Series Angle Style Air Gripper Toggle Type

M H T 2 - 3 2 D

- Finger: 2:2PCS
- Bore
- Acting type: D: Double acting



Specifications

Model	MHT2-32D	MHT2-40D	MHT2-50D	MHT2-63D
Bore (mm)	Φ32	Φ40	Φ50	Φ63
Working medium	Clean air(40μm Filteration)			
Min. Working pressure	0.6Mpa			
Max. Working pressure	0.1Mpa			
Working temperature	-10~60℃			
Lubrication	Not Required			
Finger Open/Close Angle	-3~28°	-3~27°	-2~23°	-2~23°
Effective gripping force(N.M)	12.4	36.0	63.0	106

Special Cylinder

Special Cylinder

VPC have their new product development team,responsible for product design and development.For the R&D department set up a high level of structural engineer team.Each product as per the drawings to after repeated demonstration structural engineers,product managers,and customer's final confirmation.Before the product put into the market ,we have a variety of performance testing,life testing, for this VPC has import a lot of test equipment ,in order to confirm the product has a variety of reliable performance.

As long as you tell us your detail requirements.VPC promise purchase to customized products for you within 50 days.

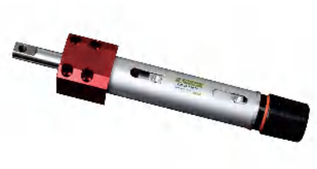

VQAL32x50-50



VPC50x100-GB



VPC80x500-63x450



TN/CXS Series
Multy Force
Pneumatic Cylinder
Φ20~Φ32



MA Series
Full Stainless Steel
Pneumatic Cylinder
Φ16~Φ50



SC Series
Full Stainless Steel
Pneumatic Cylinder
Φ32~Φ63

Cylinder Assembly Kits

Full Set Kits



DNC(ISO6431&VDMA24562)
Bore Side:Φ32,Φ40,Φ50,
Φ63,Φ80,Φ100,Φ125



MI(ISO6432)
Bore Side:Φ8,Φ10,Φ12,
Φ16,Φ20,Φ25,Φ32



MAL
Bore Side:Φ16,Φ20,Φ25,
Φ32,Φ40

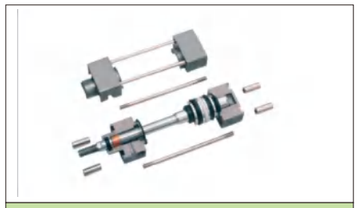

SI(ISO6431)
Bore Side:Φ32,Φ40,Φ50,Φ63,
Φ80,Φ100,Φ125,Φ160,Φ200



SC(ISO6431)
Bore Side:Φ32,Φ40,Φ50,Φ63,
Φ80,Φ100,Φ125,Φ160,Φ200



MA
Bore Side:Φ16,Φ20,Φ25,
Φ32,Φ40

Tube & Rod



SDA Aluminum Tube
Bore Side:Φ12,Φ16,Φ20,Φ25,
Φ32,Φ40,Φ50,Φ63,Φ80,
Φ100,Φ125



SC Aluminum Tube
Bore Side:Φ32,Φ40,Φ50,Φ63,
Φ80,Φ100,Φ125,Φ160,Φ200,
Φ250



SI Aluminum Tube
Bore Side:Φ32,Φ40,Φ50,Φ63,
Φ80,Φ100,Φ125,Φ160,Φ200



MA/MI Tube(ISO6432)
Stainless Steel Tube
Bore Side:Φ16,Φ20,Φ25,
Φ32,Φ40



MAL Aluminum Tube
Bore Side:Φ16,Φ20,Φ25,
Φ32,Φ40



Piston Rod
(45# Steel Chrome-plated)
Diameter:Φ4,Φ5,Φ6,Φ8,Φ10,
Φ12,Φ16,Φ20,Φ25,Φ32,Φ40,
Φ45,Φ50,Φ60,Φ70,Φ80,etc.

Magnet Switches

Main Dimensions

Cylinder	Magnet Switches	Mounting	Clamp
	CSI-U 	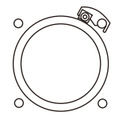	 PAM – 63 (Item Code / Bore Size)
	CSI-F 	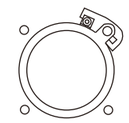	 PI – 63 (Item Code / Bore Size)
	CSI-S 		 BK Band
	CSI-M 	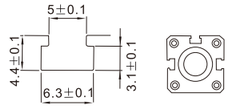	No Need Clamp
	CSI-J 	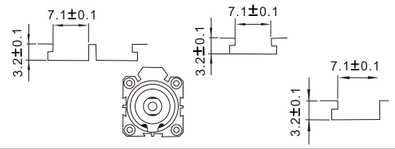	No Need Clamp
	CSI-G 	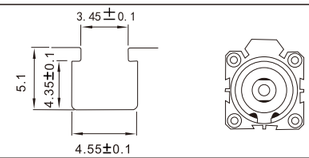	No Need Clamp
	CSI-J1 	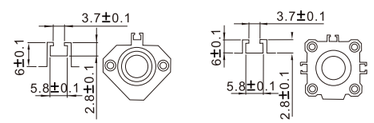	No Need Clamp
	CSI-H 	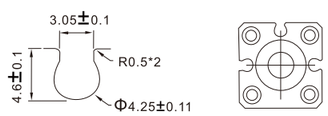	No Need Clamp