Directional Valve



IS09001 CE
PNEUMATIC®

Technical Data 4

Orifice	O.D. Of Tube	Metric Thread		Inch Threads			Taper Pipe Thread	Note
		Thread	Thread hole	Thread	Outside Diameter	Inside Diameter		
mm	mm	mm		mm			mm	
3	4	M6X1						
4	6	M8X1	Φ6.7					
5 6	8	M10X1	Φ8.5	G1/8	Φ9.7	Φ8.6	ZG1/8	01
8	10	M12X1.25	Φ10.2	G1/4	Φ13.2	Φ11.5	ZG1/4	02
10	12	M16X1.5	Φ14	G3/8	Φ16.7	Φ15.1	ZG3/8	03
15				G1/2	Φ21	Φ18.7		04
20				G3/4	Φ26.4	Φ24.2		
25				G1	Φ33.3	Φ30.3		
32				G1-1/4	Φ41.9	Φ39.1		
40				G1-1/2	Φ47.8	Φ44.9		
50				G2	Φ59.7	Φ56.7		
65				G2-1/2				
80				G3	Φ87.9	Φ85		
90				G3-1/2				
100				G4	Φ113.1	Φ110.1		

The level of the Ingress Protection

Description	I (①)			I I (②)		
	Class	Numeral	Description	Class	Numeral	Description
IP ① ② ①: Impurities Infiltrated ②: Water Infiltrated	Impurities Infiltrated	0	Not Protected	Water Infiltrated	1	Dripping Water: Vertical
		1	>50mm diameter object		2	Dripping Water: ≤15°tilt
		2	>12mm diameter object		3	Dripping Water: ≤60° tilt
		3	>2.5mm diameter object		4	Spraying Water
		4	>1mm diameter object		5	Powerful Jetting Water
		5	Dust-deposited protected		6	Infitrating Water
		6	Dust-infiltrated protected		7	Immersion

The Standard of the Explosion-proof Grade

Description	Explosion Mark	Anti-explosion Mark		Anti-explosion Grade	Temperature Class	
Ex d ⅡB T3 ① ② ③ ④ ⑤ ①Explosion Mark ②Anti-explosion Mark ③Explosion Category ④Anti-explosion Grade ⑤Temperature Class	Electrical Equipments in the undergroud mine	Isolated-explosion	d	A	450℃	T1
	Protect	Enhanced-secruity type	e	B	300℃	T2
	Factory electrical equipment	Essential safety	i	C	200℃	T3
	Protect	Special protective type	s		135℃	T4

2V1 Series Solenoid Valve

Ordering Code 2V1 Series Solenoid Valve

2 V 1 - 0 6 - □ A C 2 2 0 V

- Type Code: 2V1: 2Port, 2Position
- Joint Size: 06: G1/8″; 08: G1/4″
- Coil Type: Blank: Din type; I: Fly leads
- Standard Voltage: DC12V, DC24V, AC24V 50/60Hz, AC110V 50/60Hz, AC220V 50/60Hz, AC380V 50/60Hz



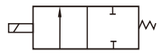

Specifications

Model	2V1-06	2V1-08
Working Medium	Clean air(40μm Filteration)、Water、Oil	
Acting Type	Direct Acting Type	
Joint Size	1/8 "	1/4 "
Orifice	2mm	
Working Pressure	0~1.0Mpa	
Max.Pressure	1.5Mpa	
Working Temperature	-10~80℃	
Power	AC220V:5.5VA DC24V:4.8W	
Insulation Grade	F	
Protective Class	IP65	
Excitation Time	<0.05s	
Seal Material	NBR	

Main Dimensions

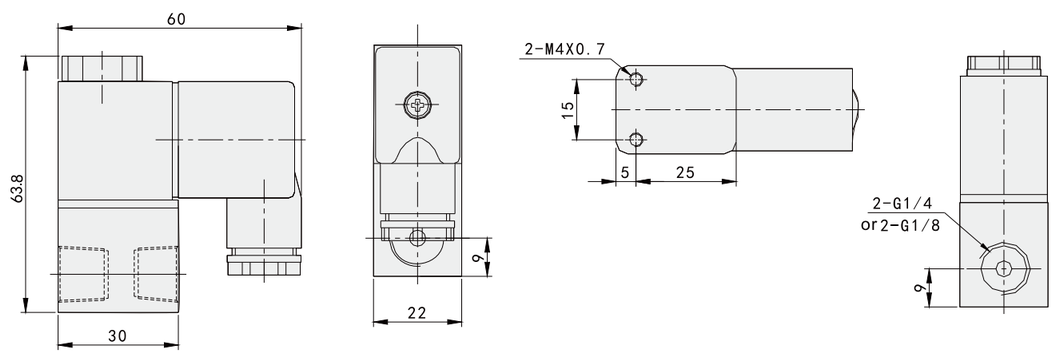

3V1 Series Solenoid Valve

Ordering Code 3V1 Series Solenoid Valve

3 V 1 - 0 6 - □ - A C 1 1 0 V

- Type Code: 3V1: 3Port, 2Position
- Joint Size: M5: M5; 06: G1/8″
- Coil Type: Blank: Din type; I: Fly leads
- Standard Voltage: DC12V, DC24V, AC24V 50/60Hz, AC110V 50/60Hz, AC220V 50/60Hz, AC380V 50/60Hz



Specifications

Model	3V1-M5	3V1-06
Working Medium	Clean air(40μm Filteration)	
Acting Type	Direct Acting Type	
Joint Size	M5	1/8″
Ways	3Port, 2Position	
Working Temperature	-5~60℃	
Orifice	1.2mm	
Working Pressure	0.8Mpa	
Coil Type	Din type、Flying leads	
Max.Acting Frequency	10Times/s	

Main Dimensions

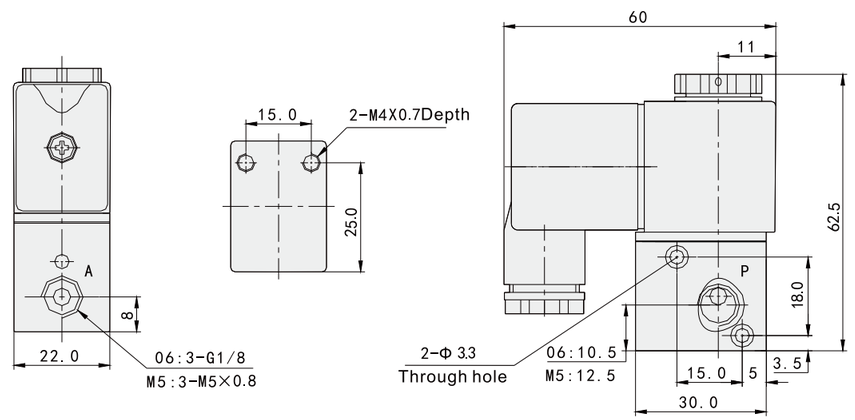

3V Series Solenoid Valve









Product features:

* Stable life cycle,guaranteed 10,000,0000 times;
* Various voltage and working style are available;
* Different surface treatment,thread types
* (G、NPT、PT、BSPP、BSPT)are available.

10-NC



10-NO

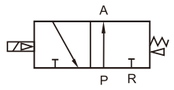

20



Ordering Code 3V Series Solenoid Valve

3V	2	10	-	08	-	□	□	-	AC220V
Type Code	Series Code	Coil		Joint Size		Control Type	Coil Type		Standard Voltage

Type Code
3V: 3Port, 2Position

Series Code
1:100 Series
2:200 Series
3:300 Series
4:400 Series

Coil
10:Single control
20:Double control

Joint Size
M5:M5
06:G1/8″
08:G1/4″
10:G3/8″
15:G1/2″

Control Type
Blank:Normal Close
NO:Normal Open

Coil Type
Blank: Din type
I: Fly leads

Standard Voltage
DC12V
DC24V
AC24V 50/60Hz
AC110V 50/60Hz
AC220V 50/60Hz
AC380V 50/60Hz

3V Series Solenoid Valve

Specifications 3V Series Solenoid Valve(2 Position 3 Port Single Control)

Model	3V110-M5	3V110- 06	3V210-06	3V210-08	3V310-08	3V310-10	3V410-15
Working Medium	Clean air(40μm Filteration)						
Acting Type	Internal Guide						
Joint Size	Import=M5 Export=M5	Import=1/8 Export=1/8	Import=1/8 Export=1/8	Import=1/4 Export=1/4	Import=1/4 Export=1/4	Import=3/8 Export=3/8	Import=1/2 Export=1/2
Sectional Area	5.5mm² (CV=0.31)	12mm² (CV=0.67)	14mm² (CV=0.78)	16mm² (CV=0.89)	25mm² (CV=1.39)	30mm² (CV=1.67)	50mm² (CV=2.79)
Working Pressure	0.15~0.9Mpa						
Max.Pressure	1.2Mpa						
Working Temperature	-5~60℃						
Voltage Range	-15%~10%						
Heat Resistant Grade	B						
Protective Class	IP65(DIN40050)						
Coil Type	Din type、Flying leads						
Max.Acting Frequency	5Times/S						4Times/S

Main Dimensions

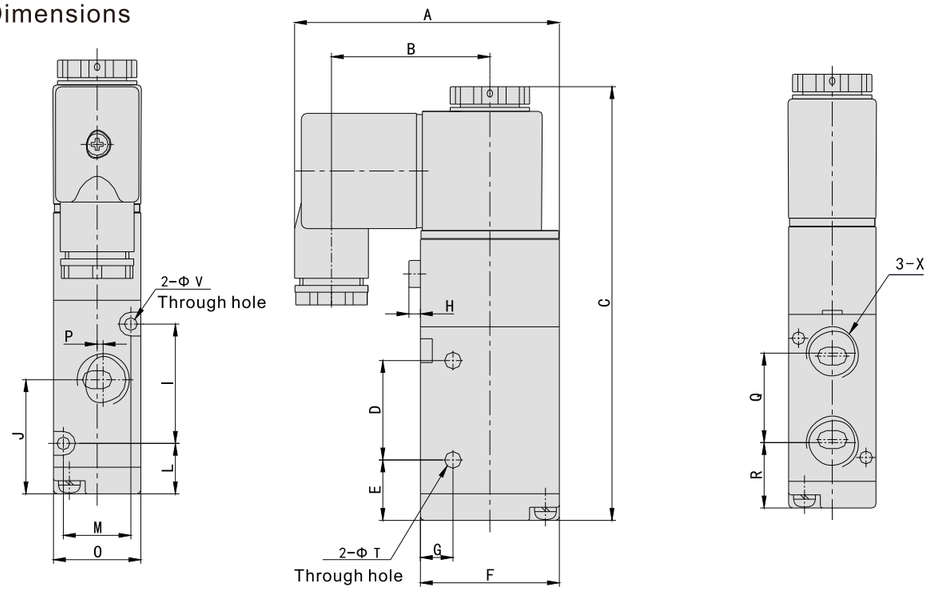

Model \ Sign	A	B	C	D	E	F	G	H	I	J	L	M	O	P	Q	R	ΦV	ΦT	X
3V110-M5	55.0	34	88.4	21	12.2	27	7.7	2.5	19	22.7	13.2	13	18	0	14.2	14.7	3.3	3.1	M5
3V110-06	55.0	34	88.4	21	12.2	27	7.7	2.5	19	23.7	13.2	13	18	1	16.0	14.7	3.3	3.1	1/8"
3V210-06	66.7	40	109	25	15.2	35	8.2	3	30	27.7	12.7	17	22	0	22.0	16.7	3.2	4.2	1/8"
3V210-08	66.7	40	109	25	15.2	35	8.2	3	30	28.7	12.7	17	22	1.5	22.5	16.7	3.2	4.2	1/4"
3V310-08	69.2	40	120	30	17.5	40	10.5	2.4	35	32.5	15.0	20	27	0	24.0	20.5	4.3	4.3	1/4"
3V310-10	69.2	40	120	30	17.5	40	10.5	2.4	35	32.5	15.0	20	27	2	24.0	20.5	4.3	4.3	3/8"
3V410-15	74.2	40	137	51	17.5	50	11.5	3	40	41.5	17.0	27	34	2	31.5	25.5	4.3	4.3	1/2"

3V Series Solenoid Valve

Specifications 3V Series Solenoid Valve(2 Position 3 Port Double Control)

Model	3V120-M5	3V120- 06	3V220-06	3V220-08	3V320-08	3V320-10	3V420-15
Working Medium	Clean air(40μm Filteration)						
Acting Type	Internal Guide						
Joint Size	Import=M5 Export=M5	Import=1/8 Export=1/8	Import=1/8 Export=1/8	Import=1/4 Export=1/4	Import=1/4 Export=1/4	Import=3/8 Export=3/8	Import=1/2 Export=1/2
Sectional Area	5.5mm² (CV=0.31)	12mm² (CV=0.67)	14mm² (CV=0.78)	16mm² (CV=0.89)	25mm² (CV=1.39)	30mm² (CV=1.67)	50mm² (CV=2.79)
Working Pressure	0.15~0.9Mpa						
Max.Pressure	1.2Mpa						
Working Temperature	-5~60℃						
Voltage Range	-15%~10%						
Heat Resistant Grade	B						
Protective Class	IP65(DIN40050)						
Coil Type	Din type、Flying leads						
Max.Acting Frequency	5Times/S						4Times/S

Main Dimensions

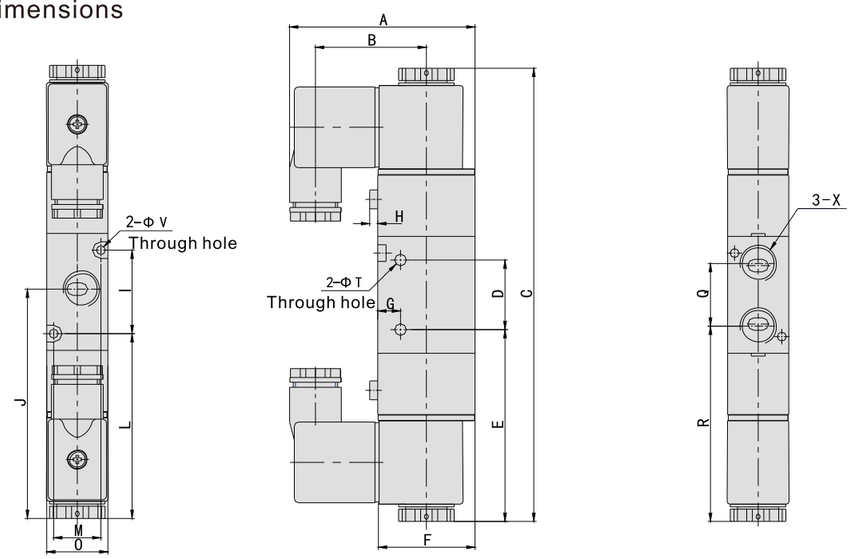

Model / Sign	A	B	C	D	E	F	G	H	I	J	L	M	O	X	Q	R	ΦV	ΦT
3V120-M5	55	34	131.4	21	55.2	27	7.7	2.5	19	65.7	56.2	13	18	M5	16	57.7	3.3	3.1
3V120-06	55	34	131.4	21	55.2	27	7.7	2.5	19	66.7	56.2	13	18	1/8"	16	57.7	3.3	3.1
3V220-06	66.7	40	162.8	25	69	35	8.2	3	30	81.4	66.4	17	22	1/8"	22	70.2	3.2	4.2
3V220-08	66.7	40	162.8	25	69	35	8.2	3	30	82.4	66.4	17	22	1/4"	22.5	70.2	3.2	4.2
3V320-08	69.2	40	174.8	30	72.4	40	10.5	2.4	35	87.4	70.0	20	27	1/4"	24	75.4	4.3	4.3
3V320-10	69.2	40	174.8	30	72.4	40	10.5	2.4	35	87.4	70.0	20	27	3/8"	24	75.4	4.3	4.3
3V420-15	74.2	40	190.5	51	95	50	11.5	3	40	95	82	27	34	1/2"	31.5	79.5	4.3	4.3

IS09001 CE
VPC PNEUMATIC®

4S Series Solenoid Valve



Product features:

* Die-Casting valve body;
* Big Flow;
* Light-Weight;
* Good storage function.

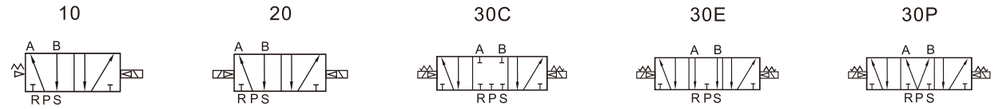

Ordering Code 4S Series Solenoid Valve

4S - 2 - 10 - 08 - □ - AC220V

- 4S → Type Code: 4S: 5Port, 2Position
- 2 → Series Code: 1:100 Series; 2:200 Series; 3:300 Series; 4:400 Series
- 10 → Coil: 10:Single control; 20:Double control; 30C:Double control 3Position Center Close; 30E:Double control 3Position Center Exhaust; 30P:Double control 3Position Center Pressure
- 08 → Joint Size: 06:G1/8″; 08:G1/4″; 10:G3/8″; 15:G1/2″
- □ → Coil Type: Blank: Din type; I: Fly leads
- AC220V → Standard Voltage: DC12V; DC24V; AC24V 50/60Hz; AC110V 50/60Hz; AC220V 50/60Hz; AC380V 50/60Hz

4S Series Solenoid Valve

Specifications 4S Series Solenoid Valve(2 Position 5 Port Single Control)

Model	4S110-06	4S210-08	4S310-10	4S410-15
Working Medium	Clean air(40μm Filteration)			
Acting Type	Internal Guide			
Joint Size	Import=1/8 Export=1/8 Exhaust=1/8	Import=1/4 Export=1/4 Exhaust=1/8	Import=3/8 Export=3/8 Exhaust=1/4	Import=1/2 Export=1/2 Exhaust=1/2
Sectional Area	18mm²	18mm²	50mm²	50mm²
Flow	799Nl/min	799Nl/min	1554Nl/min	2220Nl/min
Working Pressure	0.2~0.8Mpa			
Max.Pressure	1.2Mpa			
Working Temperature	-5~60℃			
Voltage Range	-15%~10%			
Heat Resistant Grade	B			
Protective Class	IP65(DIN40050)			
Coil Type	Din type、Flying leads			
Max.Acting Frequency	5Times/S	4Times/S	3Times/S	

Main Dimensions

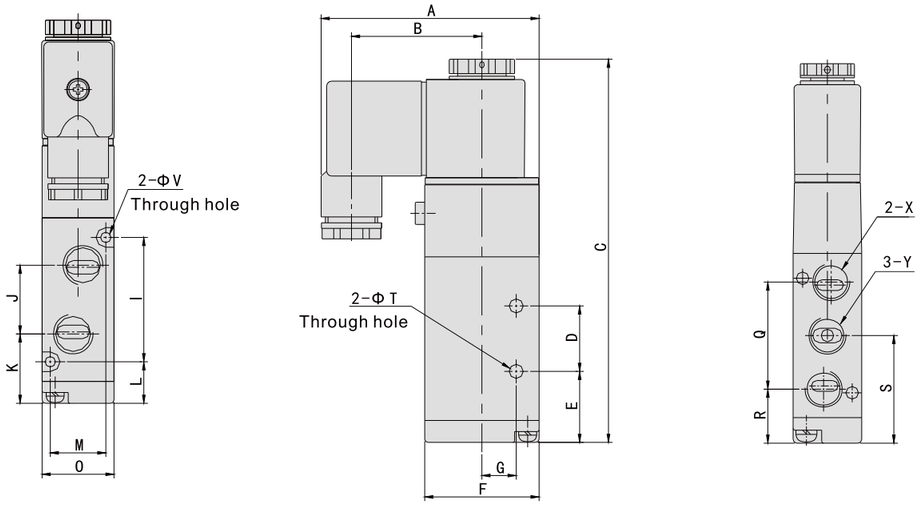

Model \ Sign	A	B	C	D	E	F	G	K	I	J	L	M	O	S	Q	R	ΦV	ΦT	X	Y
4S110-06	55	34	99.4	14	21.2	27	9.5	20.2	30	16	13.2	13	18	28.2	28	14.2	3.3	3.3	1/8"	1/8"
4S210-08	66.7	40	117	20	21.7	35	10.5	21.2	38	21	12.7	17	22	31.7	36	13.7	3.2	4.3	1/8"	1/4"
4S310-10	69.2	40	135	24	28	40	13.5	28	50	24	15	20	27	40	45	17.5	4.3	4.3	1/4"	3/8"
4S410-15	74.2	40	168.4	28	43	50	17.5	39	72	36	21	27	34	57	63	25.5	4.3	5.5	1/2"	1/2"

IS09001 CE
VPC PNEUMATIC®

4S Series Solenoid Valve

Specifications 4S Series Solenoid Valve(2 Position 5 Port Double Control)

Model	4S120-06	4S220-08	4S320-10	4S420-15
Working Medium	Clean air(40μm Filteration)			
Acting Type	Internal Guide			
Joint Size	Import=1/8 Export=1/8 Exhaust=1/8	Import=1/4 Export=1/4 Exhaust=1/8	Import=3/8 Export=3/8 Exhaust=1/4	Import=1/2 Export=1/2 Exhaust=1/2
Sectional Area	18mm²	18mm²	50mm²	50mm²
Flow	799Nl/min	799Nl/min	1554Nl/min	2220Nl/min
Working Pressure	0.2~0.8Mpa			
Max.Pressure	1.2Mpa			
Working Temperature	-5~60℃			
Voltage Range	-15%~10%			
Heat Resistant Grade	B			
Protective Class	IP65(DIN40050)			
Coil Type	Din type、Flying leads			
Max.Acting Frequency	5Times/S	4Times/S	3Times/S	

Main Dimensions

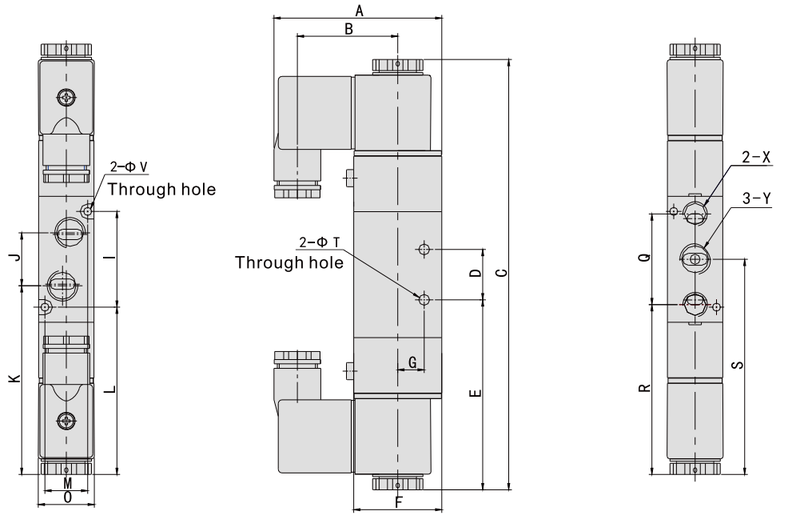

Model \ Sign	A	B	C	D	E	F	G	K	I	J	L	M	O	S	Q	R	ΦV	ΦT	X	Y
4S120-06	55	34	142.4	14	64.2	27	9.5	63.2	30	16	56.2	13	18	71.2	28	57.2	3.3	3.3	1/8"	1/8"
4S220-08	66.7	40	171	20	75.4	35	10.5	74.9	38	21	66.4	17	22	85.4	36	67.4	3.2	4.3	1/8"	1/4"
4S320-10	69.2	40	190	24	82.9	40	13.5	82.9	50	24	69.9	20	27	94.9	45	72.4	4.3	4.3	1/4"	3/8"
4S420-15	74.2	40	222.8	28	97.4	50	17.5	93.4	72	36	75.4	27	34	111.4	63	80	4.3	5.5	1/2"	1/2"

4S Series Solenoid Valve

Specifications 4S Series Solenoid Valve(3 Position 5 Port)

Model	4S130C-06	4S230C-08	4S330C-10	4S430C-15
	4S130E-06	4S230E-08	4S330E-10	4S430E-15
	4S130P-06	4S230P-08	4S330P-10	4S430P-15
Working Medium	Clean air(40μm Filteration)			
Acting Type	Internal Guide			
Joint Size	Import=1/8 Export=1/8 Exhaust=1/8	Import=1/4 Export=1/4 Exhaust=1/8	Import=3/8 Export=3/8 Exhaust=1/4	Import=1/2 Export=1/2 Exhaust=1/2
Sectional Area	16mm²	16mm²	25mm²	30mm²
Flow	710Nl/min	710Nl/min	1110Nl/min	1332Nl/min
Working Pressure	0.2~0.8Mpa			
Max.Pressure	1.2Mpa			
Working Temperature	-5~60℃			
Voltage Range	-15%~10%			
Heat Resistant Grade	B			
Protective Class	IP65(DIN40050)			
Coil Type	Din type、Flying leads			
Max.Acting Frequency	5Times/S	4Times/S	3Times/S	

Main Dimensions:Center Close/Center Exhaust/Center Pressure

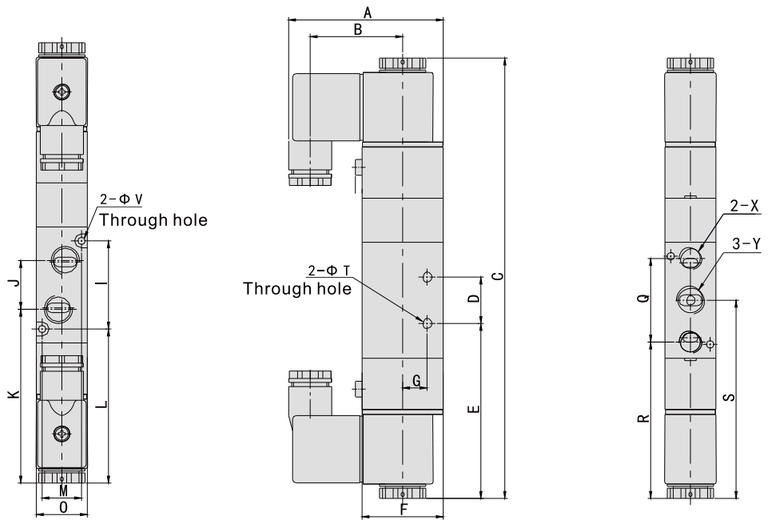

Model \ Sign	A	B	C	D	E	F	G	K	I	J	L	M	O	S	Q	R	ΦV	ΦT	X	Y
4S130-06	55	34	157.4	14	64.2	27	9.5	63.2	30	16	56.2	13	18	71.2	28	57.2	3.3	3.3	1/8"	1/8"
4S230-08	66.7	40	190	20	75.4	35	10.5	74.9	38	21	66.4	17	22	85.4	36	67.4	3.2	4.3	1/8"	1/4"
4S330-10	69.2	40	209	24	82.9	40	13.5	82.9	50	24	69.9	20	27	95	45	72.4	4.3	4.3	1/4"	3/8"
4S430-15	74.2	40	243.8	28	97.4	50	17.5	93.4	72	36	75.4	27	34	111.4	63	79.9	4.3	5.5	1/2"	1/2"

4V Series Solenoid Valve



Product features:

* Stable life cycle,guaranteed 10,000,0000 times;
* Various voltage and working style are available;
* Different surface treatment,thread types
* (G、NPT、PT、BSPP、BSPT)are available.



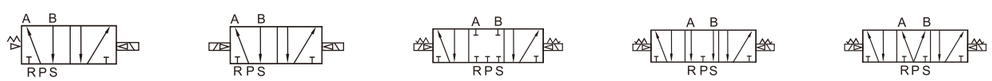

Ordering Code 4V Series Solenoid Valve

4V 2 10 - 08 - □ - AC220V

Type Code
4V: 5Port, 2Position

Series Code
1:100 Series
2:200 Series
3:300 Series
4:400 Series

Coil
10:Single control
20:Double control
30C:Double control 3Position Center Close
30E:Double control 3Position Center Exhaust
30P:Double control 3Position Center Pressure

Joint Size
M5:M5
06:G1/8″
08:G1/4″
10:G3/8″
15:G1/2″

Coil Type
Blank: Din type
I: Fly leads

Standard Voltage
DC12V
DC24V
AC24V 50/60Hz
AC110V 50/60Hz
AC220V 50/60Hz
AC380V 50/60Hz

4V Series Solenoid Valve

Specifications 4V Series Solenoid Valve(2 Position 5 Port Single Control)

Model	4V110-M5	4V110- 06	4V210-06	4V210-08	4V310-08	4V310-10	4V410-15
Working Medium	Clean air(40μm Filteration)						
Acting Type	Internal Guide						
Joint Size	Import=M5 Export=M5 Exhaust=M5	Import=1/8 Export=1/8 Exhaust=1/8	Import=1/8 Export=1/8 Exhaust=1/8	Import=1/4 Export=1/4 Exhaust=1/8	Import=1/4 Export=1/4 Exhaust=1/4	Import=3/8 Export=3/8 Exhaust=1/4	Import=1/2 Export=1/2 Exhaust=1/2
Sectional Area	5.5mm² (CV=0.31)	12mm² (CV=0.67)	14mm² (CV=0.78)	16mm² (CV=0.89)	25mm² (CV=1.39)	30mm² (CV=1.67)	50mm² (CV=2.79)
Working Pressure	0.15~0.9Mpa						
Max.Pressure	1.2Mpa						
Working Temperature	-5~60℃						
Voltage Range	-15%~10%						
Heat Resistant Grade	B						
Protective Class	IP65(DIN40050)						
Coil Type	Din type、Flying leads						
Max.Acting Frequency	5Times/S				4Times/S		3Times/S

Main Dimensions

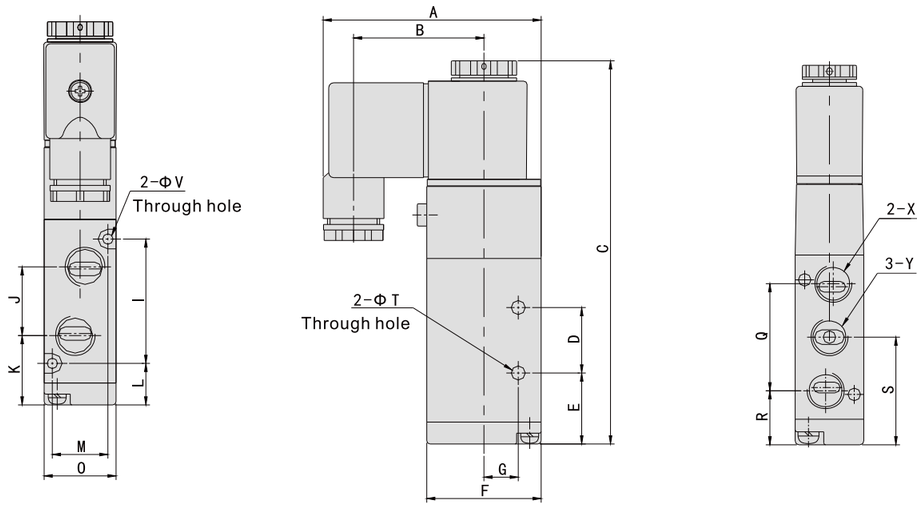

Model / Sign	A	B	C	D	E	F	G	K	I	J	L	M	O	S	Q	R	ΦV	ΦT	X	Y
4V110-M5	55	34	99.4	14	21.2	27	9.5	21.2	30	14	13.2	13	18	28.2	27	14.7	3.3	3.3	M5	M5
4V110-06	55	34	99.4	14	21.2	27	9.5	20.2	30	16	13.2	13	18	28.2	28	14.2	3.3	3.3	1/8"	1/8"
4V210-06	66.7	40	117	20	21.7	35	10.5	22.7	38	18	12.7	17	22	31.7	36	13.7	3.2	4.3	1/8"	1/8"
4V210-08	66.7	40	117	20	21.7	35	10.5	21.2	38	21	12.7	17	22	31.7	36	13.7	3.2	4.3	1/8"	1/4"
4V310-08	69.2	40	135	24	28	40	13.5	29	50	22	15	20	27	40	45	17.5	4.3	4.3	1/4"	1/4"
4V310-10	69.2	40	135	24	28	40	13.5	28	50	24	15	20	27	40	45	17.5	4.3	4.3	1/4"	3/8"
4V410-15	74.2	40	168.4	28	43	50	17.5	39	72	36	21	27	34	57	63	25.5	4.3	5.5	1/2"	1/2"

VPC PNEUMATIC®
IS09001 CE

4V Series Solenoid Valve

Specifications 4V Series Solenoid Valve(2 Position 5 Port Double Control)

Model	4V120-M5	4V120- 06	4V220-06	4V220-08	4V320-08	4V320-10	4V420-15
Working Medium	Clean air(40μm Filteration)						
Acting Type	Internal Guide						
Joint Size	Import=M5 Export=M5 Exhaust=M5	Import=1/8 Export=1/8 Exhaust=1/8	Import=1/8 Export=1/8 Exhaust=1/8	Import=1/4 Export=1/4 Exhaust=1/8	Import=1/4 Export=1/4 Exhaust=1/4	Import=3/8 Export=3/8 Exhaust=1/4	Import=1/2 Export=1/2 Exhaust=1/2
Sectional Area	5.5mm² (CV=0.31)	12mm² (CV=0.67)	14mm² (CV=0.78)	16mm² (CV=0.89)	25mm² (CV=1.39)	30mm² (CV=1.67)	50mm² (CV=2.79)
Working Pressure	0.15~0.9Mpa						
Max.Pressure	1.2Mpa						
Working Temperature	-5~60℃						
Voltage Range	-15%~10%						
Heat Resistant Grade	B						
Protective Class	IP65(DIN40050)						
Coil Type	Din type、Flying leads						
Max.Acting Frequency	5Times/S				4Times/S	3Times/S	

Main Dimensions

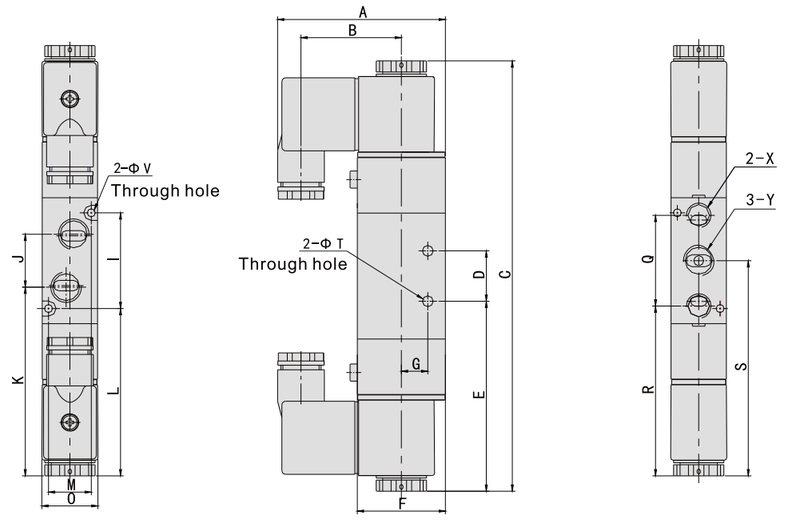

Model / Sign	A	B	C	D	E	F	G	K	I	J	L	M	O	S	Q	R	ΦV	ΦT	X	Y
4V120-M5	55	34	142.4	14	64.2	27	9.5	64.3	30	14	56.2	13	18	71.2	27	57.2	3.3	3.3	M5	M5
4V120-06	55	34	142.4	14	64.2	27	9.5	63.2	30	16	56.2	13	18	71.2	28	57.2	3.3	3.3	1/8"	1/8"
4V220-06	66.7	40	171	20	75.4	35	10.5	76.4	38	18	66.4	17	22	85.4	36	67.4	3.2	4.3	1/8"	1/8"
4V220-08	66.7	40	171	20	75.4	35	10.5	74.9	38	21	66.4	17	22	85.4	36	67.4	3.2	4.3	1/8"	1/4"
4V320-08	69.2	40	190	24	82.9	40	13.5	83.9	50	22	69.9	20	27	94.9	45	72.4	4.3	4.3	1/4"	1/4"
4V320-10	69.2	40	190	24	82.9	40	13.5	82.9	50	24	69.9	20	27	94.9	45	72.4	4.3	4.3	1/4"	3/8"
4V420-15	74.2	40	222.8	28	97.4	50	17.5	93.4	72	36	75.4	27	34	111.4	63	80	4.3	5.5	1/2"	1/2"

4V Series Solenoid Valve

Specifications 4V Series Solenoid Valve(3 Position 5 Port Center Close)

Model	4V130C-M5	4V130C-06	4V230C-06	4V230C-08	4V330C-08	4V330C-10	4V430C-15
Working Medium	Clean air(40μm Filteration)						
Acting Type	Internal Guide						
Joint Size	Import=M5 Export=M5 Exhaust=M5	Import=1/8 Export=1/8 Exhaust=1/8	Import=1/8 Export=1/8 Exhaust=1/8	Import=1/4 Export=1/4 Exhaust=1/8	Import=1/4 Export=1/4 Exhaust=1/4	Import=3/8 Export=3/8 Exhaust=1/4	Import=1/2 Export=1/2 Exhaust=1/2
Sectional Area	5mm² (CV=0.28)	9mm² (CV=0.50)	12mm² (CV=0.67)	12mm² (CV=0.67)	18mm² (CV=1.0)	18mm² (CV=1.0)	30mm² (CV=1.67)
Working Pressure	0.15~0.9Mpa						
Max.Pressure	1.2Mpa						
Working Temperature	-5~60℃						
Voltage Range	-15%~10%						
Heat Resistant Grade	B						
Protective Class	IP65(DIN40050)						
Coil Type	Din type、Flying leads						
Max.Acting Frequency	3Times/S						

Specifications 4V Series Solenoid Valve(3 Position 5 Port Center Exhaust)

Model	4V130E-M5	4V130E-06	4V230E-06	4V230E-08	4V330E-08	4V330E-10	4V430E-15
Working Medium	Clean air(40μm Filteration)						
Acting Type	Internal Guide						
Joint Size	Import=M5 Export=M5 Exhaust=M5	Import=1/8 Export=1/8 Exhaust=1/8	Import=1/8 Export=1/8 Exhaust=1/8	Import=1/4 Export=1/4 Exhaust=1/8	Import=1/4 Export=1/4 Exhaust=1/4	Import=3/8 Export=3/8 Exhaust=1/4	Import=1/2 Export=1/2 Exhaust=1/2
Sectional Area	5mm² (CV=0.28)	12mm² (CV=0.50)	12mm² (CV=0.67)	12mm² (CV=0.67)	18mm² (CV=1.0)	18mm² (CV=1.0)	30mm² (CV=1.67)
Working Pressure	0.15~0.9Mpa						
Max.Pressure	1.2Mpa						
Working Temperature	-5~60℃						
Voltage Range	-15%~10%						
Heat Resistant Grade	B						
Protective Class	IP65(DIN40050)						
Coil Type	Din type、Flying leads						
Max.Acting Frequency	3Times/S						

4V Series Solenoid Valve

Specifications 4V Series Solenoid Valve(3 Position 5 Port Center Pressure)

Model	4V130P-M5	4V130P-06	4V230P-06	4V230P-08	4V330P-08	4V330P-10	4V430P-15
Working Medium	Clean air(40μm Filteration)						
Acting Type	Internal Guide						
Joint Size	Import=M5 Export=M5 Exhaust=M5	Import=1/8 Export=1/8 Exhaust=1/8	Import=1/8 Export=1/8 Exhaust=1/8	Import=1/4 Export=1/4 Exhaust=1/8	Import=1/4 Export=1/4 Exhaust=1/4	Import=3/8 Export=3/8 Exhaust=1/4	Import=1/2 Export=1/2 Exhaust=1/2
Sectional Area	5mm² (CV=0.28)	9mm² (CV=0.50)	12mm² (CV=0.67)	12mm² (CV=0.67)	18mm² (CV=1.0)	18mm² (CV=1.0)	30mm² (CV=1.67)
Working Pressure	0.15~0.9Mpa						
Max.Pressure	1.2Mpa						
Working Temperature	-5~60℃						
Voltage Range	-15%~10%						
Heat Resistant Grade	B						
Protective Class	IP65(DIN40050)						
Coil Type	Din type、Flying leads						
Max.Acting Frequency	3Times/S						

Main Dimensions:Center Close/Center Exhaust/Center Pressure

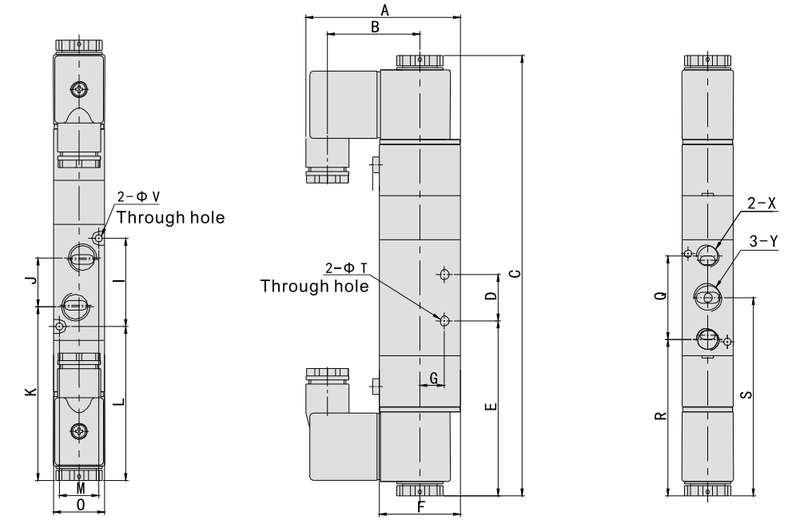

Model \ Sign	A	B	C	D	E	F	G	K	I	J	L	M	O	S	Q	R	ΦV	ΦT	X	Y
4V130-M5	55	34	157.4	14	64.2	27	9.5	64.3	30	14	56.2	13	18	71.2	27	57.7	3.3	3.3	M5	M5
4V130-06	55	34	157.4	14	64.2	27	9.5	63.2	30	16	56.2	13	18	71.2	28	57.2	3.3	3.3	1/8"	1/8"
4V230-06	66.7	40	190	20	75.4	35	10.5	76.4	38	18	66.4	17	22	85.4	36	67.4	3.2	4.3	1/8"	1/8"
4V230-08	66.7	40	190	20	75.4	35	10.5	74.9	38	21	66.4	17	22	85.4	36	67.4	3.2	4.3	1/8"	1/4"
4V330-08	69.2	40	209	24	82.9	40	13.5	83.9	50	22	69.9	20	27	95	45	72.4	4.3	4.3	1/4"	1/4"
4V330-10	69.2	40	209	24	82.9	40	13.5	82.9	50	24	69.9	20	27	95	45	72.4	4.3	4.3	1/4"	3/8"
4V430-15	74.2	40	243.8	28	97.4	50	17.5	93.4	72	36	75.4	27	34	111.4	63	79.9	4.3	5.5	1/2"	1/2"

V Series Manifold

Ordering Code V Series Manifold

100M - 5 F

- 100M: Type Code
  - 100M:1/8"valve body
  - 200M:1/4"valve body
  - 300M:3/8"valve body
  - 400M:1/2"valve body
- 5: Stations No (1~16)
- F: Manifold



Ordering Code Blind plate

100M - B

- 100M: Type Code
  - 100M:1/8"valve body
  - 200M:1/4"valve body
  - 300M:3/8"valve body
  - 400M:1/2"valve body
- B: Blind plate



Specifications

Model	100 Series	200 Series	300 Series	400 Series
Working Medium	Clean air(40μm Filteration)			
Working Pressure	0.15~0.9Mpa			
Max.Pressure	1.5Mpa			
Working Temperature	−20~70℃			
Application Scope	4V100 Series 4A100 Series	4V200 Series 4A200 Series	4V300 Series 4A300 Series	4V400 Series 4A400 Series

Corresponding Application

Valve Model	4V110/4V120/4V130 4A110/4A120/4A130	4V210/4V220/4V230 4A210/4A220/4A230	4V310/4V320/4V330 4A310/4A320/4A230	4V410/4V220/4V430 4A410/4A420/4A430
Manifold Model	100M-NF(N≤16)	200M-NF(N≤16)	300M-NF(N≤12)	400M-NF(N≤7)

VPC PNEUMATIC®
IS09001 CE

V Series Manifold

Main Dimensions

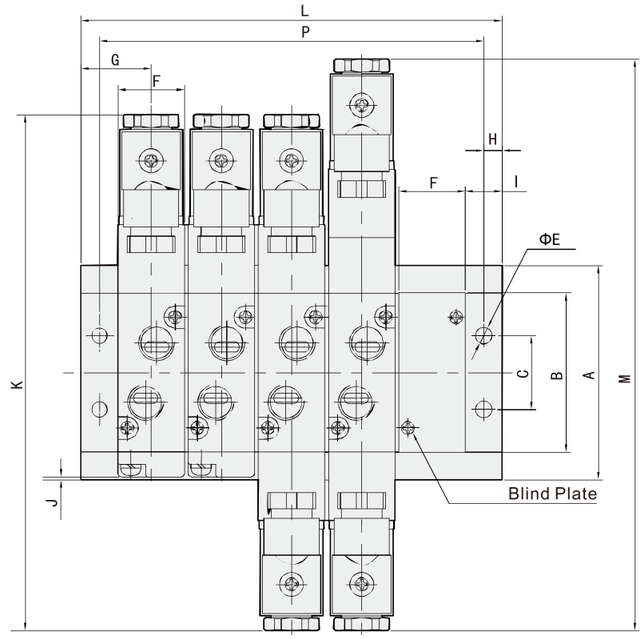

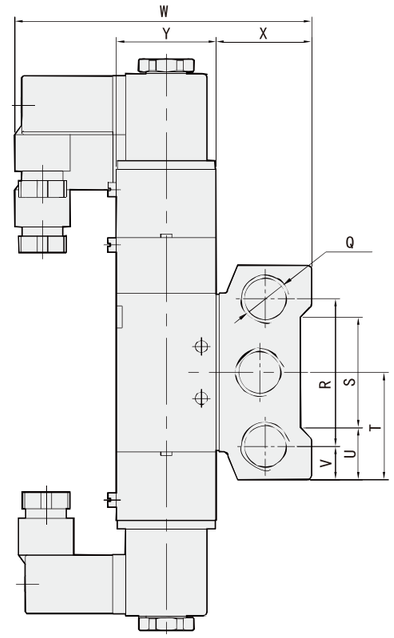

Model	A	B	C	E	F	G	H	I	J	K
100M-□F	58	43.2	20	4.5	18.3	19	5	10	-0.8	139.4
200M-□F	61	50.7	21	4.5	22.4	23	6	12	1.2	170
300M-□F	75	64.8	26	4.5	27.3	27	6	13.5	2.5	188.8
400M-□F	104	94.5	32	4.5	34.3	31.5	7	14.5	5	221.8

Model	M	Q	R	S	T	U	V	W	X	Y
100M-□F	154.5	G1/4″	40	30	29	14	9	79	25	27
200M-□F	189	G1/4″	43	32	30.5	14.5	9	93	26	35
300M-□F	208	G3/8″	53	48	37.5	13.5	11	99.5	30	40
400M-□F	243	G1/2″	68	67	52	18.5	18	112.5	38	50

Model	L															
	1F	2F	3F	4F	5F	6F	7F	8F	9F	10F	11F	12F	13F	14F	15F	16F
100M-□F	38	57	76	95	114	133	152	171	190	209	228	247	266	285	304	323
200M-□F	46	69	92	115	138	161	184	207	230	253	276	299	322	345	368	391
300M-□F	54	82	110	138	166	194	222	250	278	306	334	362	-	-	-	-
400M-□F	63	98	133	168	203	238	273	-	-	-	-	-	-	-	-	-

Model	P															
	1F	2F	3F	4F	5F	6F	7F	8F	9F	10F	11F	12F	13F	14F	15F	16F
100M-□F	28	47	66	85	104	123	142	161	180	199	218	237	256	275	294	313
200M-□F	34	57	80	103	126	149	172	195	218	241	264	287	310	333	356	379
300M-□F	42	70	98	126	154	182	210	238	266	294	322	350	-	-	-	-
400M-□F	49	84	119	154	189	225	259	-	-	-	-	-	-	-	-	-

VSV Series Micro Solenoid Valve

Ordering Code VSV Series Micro Solenoid Valve

VSV23 - □ 10 V DC24V

- Type Code: VSV: Micro Solenoid Valve
- Control Type: Blank: Normal Close; T: Normal Open
- Coil Type: V: Vertical Type; H: Horizontal Type; C: Pin Type
- Standard Voltage: DC24V; AC220V 50/60Hz



Specifications

Model	VSV10-V	VSV10-H	VSV10-C
Working Medium	Clean Air(40μm filteration)		
Acting Type	3/2 N.C 3/2N.O		
Working Pressure	0~0.7Mpa		
Ambient Temp.	-5~50℃		
Orifice Size	1.0mm (R port) /0. 75mm (P port)		
Lubrication	No		
Flow rate at 6bar and △p=1bar	P1→P2 16NL/min P2→P3 23NL/min		
Response time	Less than 10ms		
Nominal voltage	DC24V/AC220v		
Voltage Range	Rated Voltage:±10%		
Duty cycle	ED 100%		
Max Working Frequency	30HZ		
Insulation Class	H Class		
Degree of protection	IP50		
Life time expectancy	More than 50 millions times		
Coil Type	Vertical Type	Horizontal Type	Pin Type

Installation Dimensions

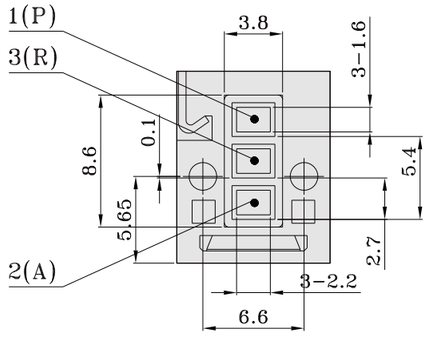

Main Specification

Vertical Type

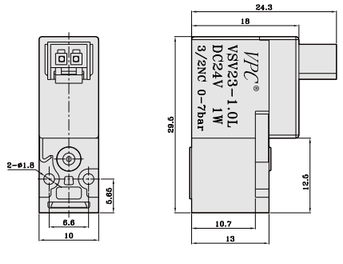

Horizontal Type

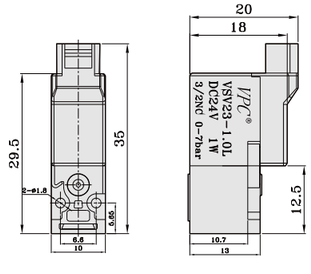

Pin Type

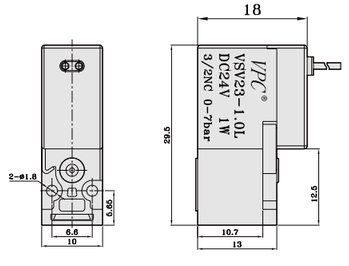

VSV Series Micro Solenoid Valve Combination

Ordering Code VSV Series Micro Solenoid Valve Combination

VSV10 - 4 F

- Type Code
- Stations Number: 1~16
- Manifold



Main Specification

1 Station Base installation

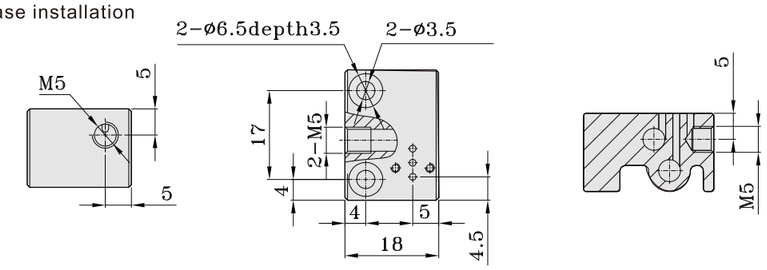

Multi-Station Base installation

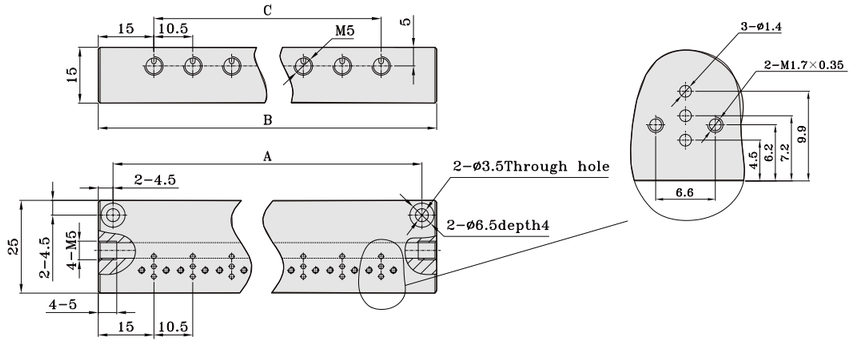

Model	A										
	2F	3F	4F	5F	6F	7F	8F	9F	10F	11F	NF
VSV10-□F	32.5	43	53.5	64	74.5	85	95.5	106	116.5	127	22+(N-1)x10.5

Model	B										
	2F	3F	4F	5F	6F	7F	8F	9F	10F	11F	NF
VSV10-□F	40.5	51	61.5	72	82.5	93	103.5	114	124.5	135	30+(N-1)x10.5

Model	C										
	2F	3F	4F	5F	6F	7F	8F	9F	10F	11F	NF
VSV10-□F	32.5	43	53.5	64	74.5	85	95.5	106	116.5	127	(N-1)x10.5

VSV Series Micro Solenoid Valve

Ordering Code VSV Series Micro Solenoid Valve

VSV | 15 | - | 1.4L | V

- VSV: Type Code — VSV: Micro Solenoid Valve
- 15: Ways — 15:15mm valve body
- 1.4L: Orifice — 1.4:1.4mm
- V: Coil Type — V: Vertical Type; H: Horizontal Type; C: Pin Type



Specifications

Model	VSV15-1.4LV	VSV15-1.4LH	VSV15-1.4LC
Working Medium	Clean Air(40μm filteration)		
Acting Type	Normal Close Direction Type		
Working Pressure	0~0.7Mpa		
Ambient Temp.	-5~50℃		
Reflect Time	⩽20m/s		
Max Working Frequency	20Times/S		
Manual Mode	Button Type		
Lubrication	No		
Heat-resistant Class	F Class		
Protective Class	IP65		
Rated Voltage	DC24V		
Voltage Range	Rated Voltage:±10%		
Orifice	1.4mm		
Power	2.3W(With LED)		
Coil Type	Vertical Type	Horizontal Type	Pin Type

Main Specification

Horizontal Type

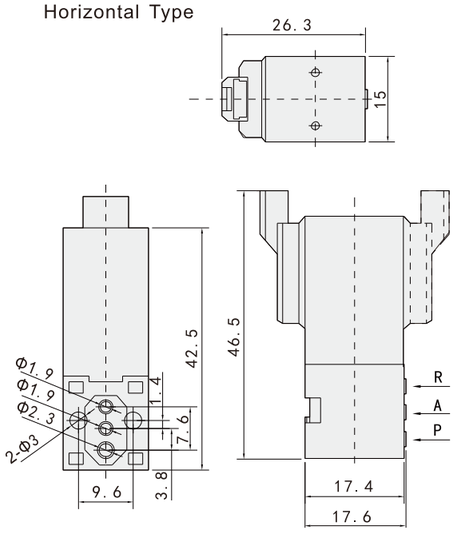

Vertical Type

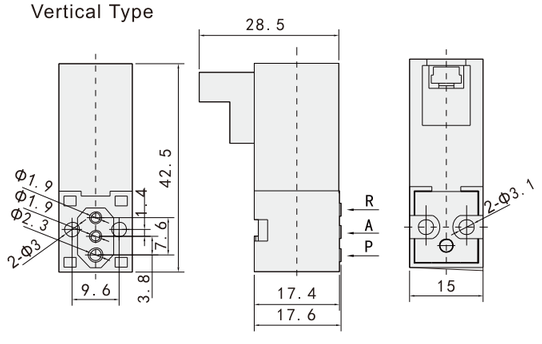

Pin Type

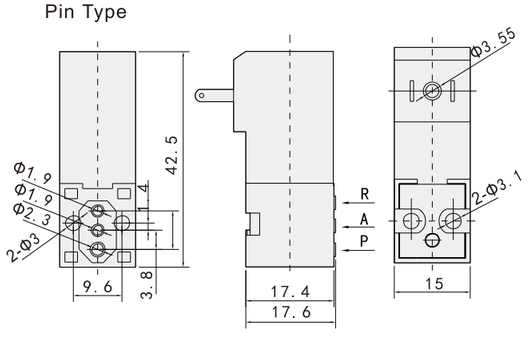

VSV Series Micro Solenoid Valve Combination

Ordering Code VSV Series Micro Solenoid Valve Combination

VSV15 | - | 4 | F

- VSV15: Type Code
- 4: Stations Number — 1~16
- F: Manifold



Main Specification

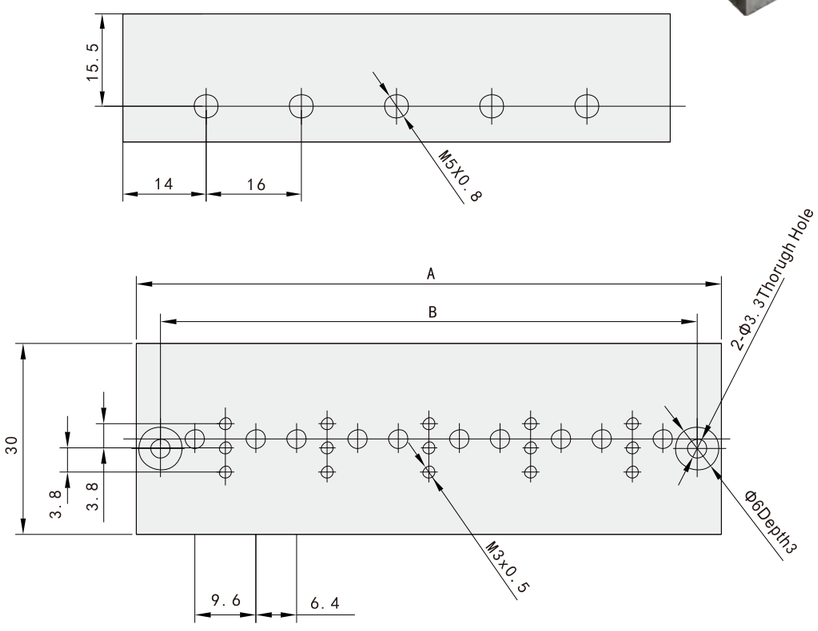

Model	A									
	1F	2F	3F	4F	5F	6F	7F	8F	9F	10F
VSV15-□F	28	44	60	76	92	108	124	140	156	172

Model	B									
	1F	2F	3F	4F	5F	6F	7F	8F	9F	10F
VSV15-□F	21	37	53	69	85	101	117	133	149	165

SY Series Solenoid Valve







3120
5120



3220
5220



3320
5320

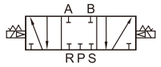

3420
5420

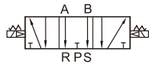

3520
5520



Ordering Code

S Y 3 | 1 | 2 0 | □ | - | M 5 | - | D C 2 4 V

Type Code
SY3:SY3 series
SY5:SY5 series
SY7:SY7 series
SY9:SY9 series

Series Code
1:Single control
2:Double control
3:Double control 3Position Center Close
4:Double control 3Position Center Exhaust
5:Double control 3Position Center Pressure

Coil
L:Vertical Type
M:Horizontal Type
G:Pin Type

Joint Size
M5:M5X0.8
01:1/8″

Standard Voltage
DC24V
AC220V 50/60Hz

Specifications

Model	SY3120	SY3220	SY3320 SY3420 SY3520	SY5120	SY5220	SY5320 SY5420 SY5520
Working Medium	Clean air(40μm Filteration)					
Working Pressure	0.15~0.7Mpa	0.1~0.7Mpa	0.2~0.7Mpa	0.15~0.7Mpa	0.1~0.7Mpa	0.2~0.7Mpa
Working Temperature	-10~60℃					
Max operating frequency	10Hz	10Hz	3Hz	5Hz	5Hz	3Hz
Response time	<12ms	<12ms	<15ms	<19ms	<19ms	<32ms
Exhaust Way	Centralized exhaust					
Lubrication	Not necessary					
Installation type	Free					
Impact Resistance Vibration Resistance	150/30m/s²					
Protective Class	IP65					
Joint Size	M5			1/8"		

SY Series Solenoid Valve

Main Dimensions

SY3120-L

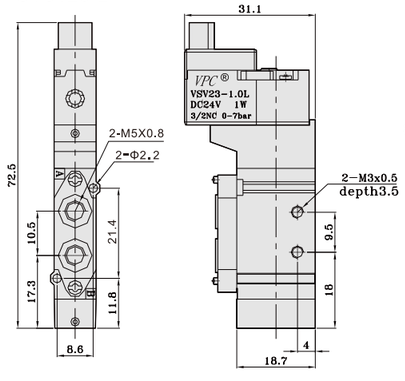

SY3120-G

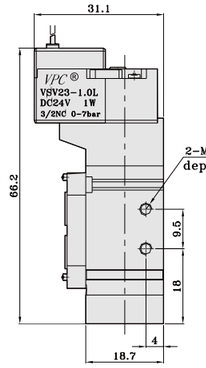

SY3120-M

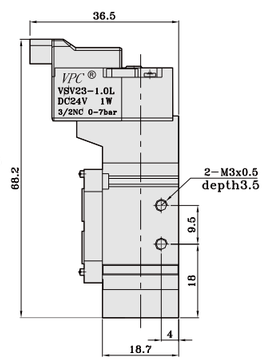

SY3220-L

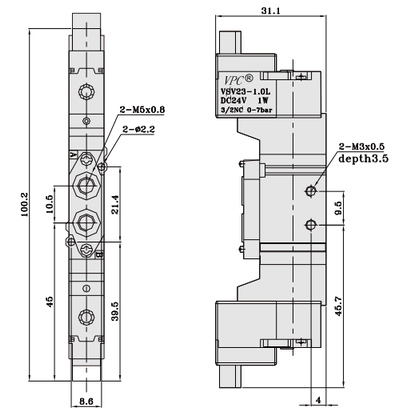

SY3220-G

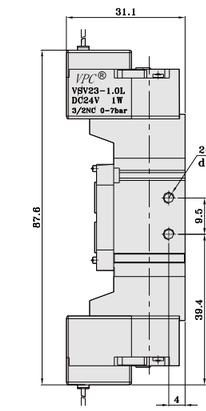

SY3220-M

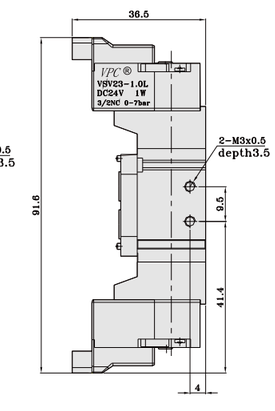

3
SY3420-L
5

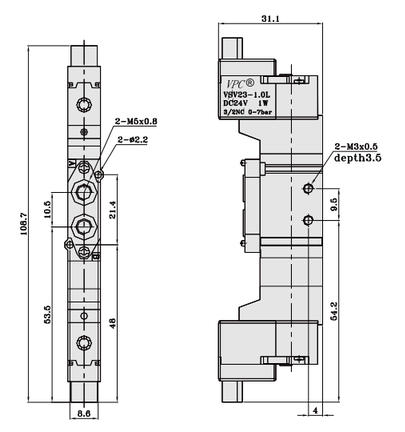

3
SY3420-G
5

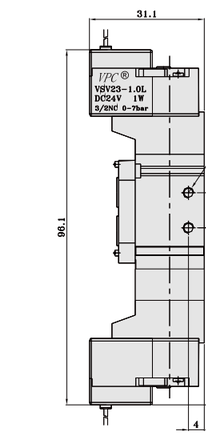

3
SY3420-M
5

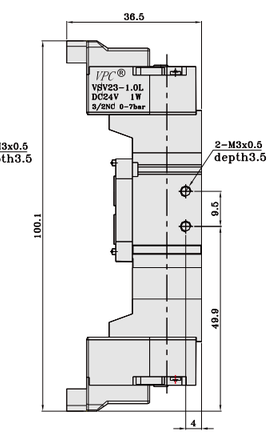

SY Series Solenoid Valve

Main Dimensions

SY5120-L

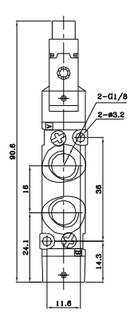

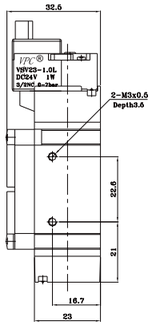

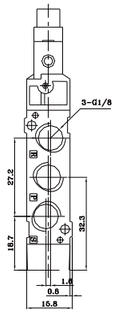

SY5120-G

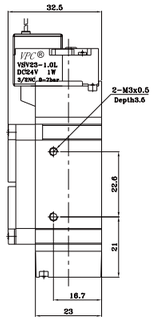

SY5120-M

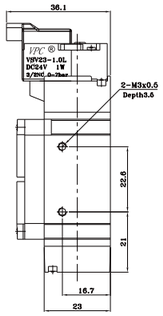

SY5220-L

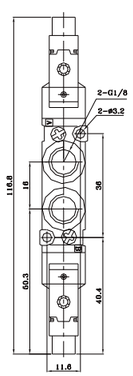

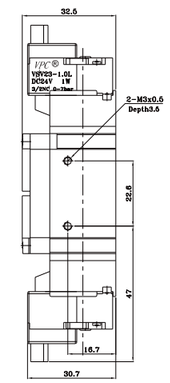

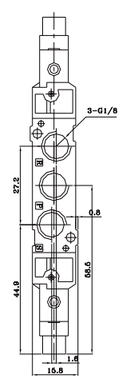

SY5220-G

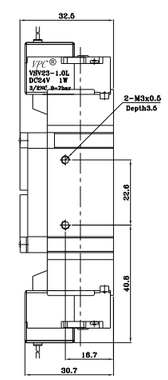

SY5220-M

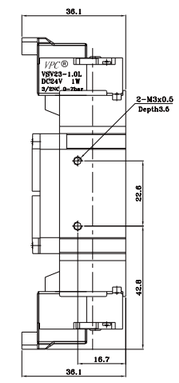

3
SY5420-L
5

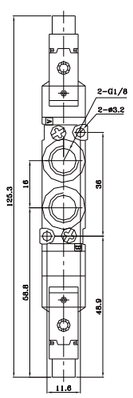

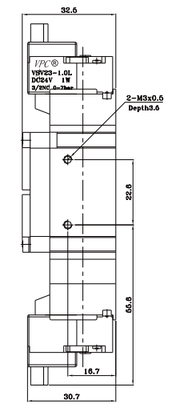

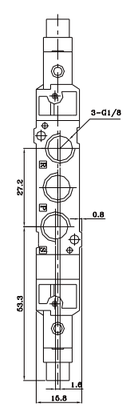

3
SY5420-G
5

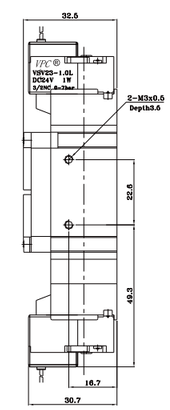

3
SY5420-M
5

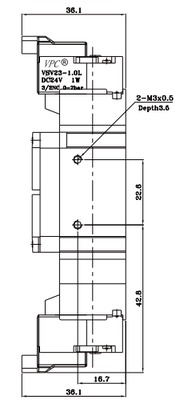

IS09001 CE
VPC PNEUMATIC®

SY Series Manifold

Ordering Code SY Series Manifold

S S Y 3 - 5 F

- S S Y 3 — Type Code
  - SSY3:SY3 valve body
  - SSY5:SY5 valve body
- 5 — Stations Number
  - 1~16
- F — Manifold



Main Dimensions

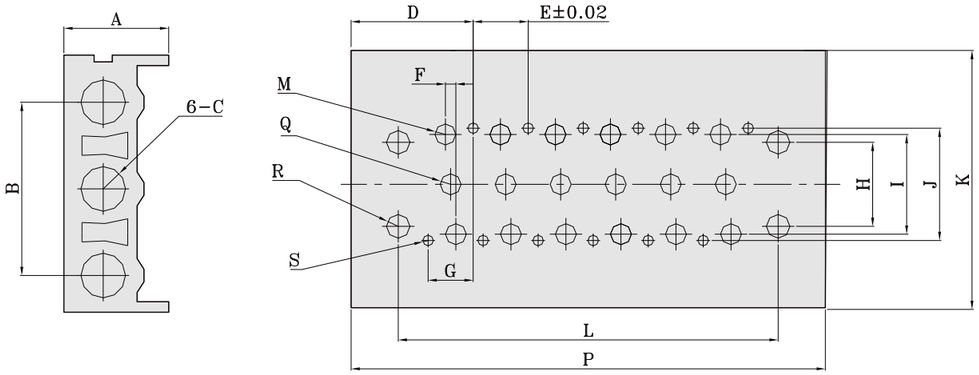

Model	A	B	C	E	F	G	H	I	J	K
SSY3-□F	20	33	RC1/8″	23.3	10.5	8.6	16	19	21.4	49
SSY5-□F	26.5	42	RC1/4″	22.8	16	11.6	20	29.4	36	60

Model	M	Q	R	S
SSY3-□F	2-Φ4.5 through hole	Φ4.5 through hole	4-Φ4.5 through hole	M2x0.4 depth 4.5
SSY5-□F	2-Φ6 depth 15	Φ6 depth 10	4-Φ4.5 through hole	M3x0.5 depth 6.5

Model	L															
	1F	2F	3F	4F	5F	6F	7F	8F	9F	10F	11F	12F	13F	14F	15F	16F
SSY3-□F	20	30.5	41	51.5	62	72.5	83	93.5	104	114.5	125	135.5	146	156.5	167	177.5
SSY5-□F	24	40	56	72	88	104	120	136	152	168	184	200	216	232	248	264

Model	P															
	1F	2F	3F	4F	5F	6F	7F	8F	9F	10F	11F	12F	13F	14F	15F	16F
SSY3-□F	38	48.5	59	69.5	80	90.5	101	111.5	122	132.5	143	153.5	164	174.5	185	195.5
SSY5-□F	34	50	66	82	98	114	130	146	162	178	194	210	226	242	258	274

VF Series Solenoid Valve



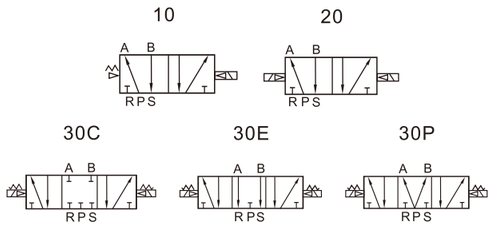

Ordering Code VF Series Solenoid Valve

VF3 | 1 | 20 | □ | - | 02 | - | AC220V

Type Code
3:VF3000
5:VF5000

Coil
1:Single control
2:Double control
3:Double control 3Position Center Close
4:Double control 3Position Center Exhaust
5:Double control 3Position Center Pressure

Coil Type
G:Flying leads coil 300mm
H:Flying leads coil 600mm
E:DIN coil
T:DIN connector with LED

Joint Size
02:1/4″
03:3/8″

Standard Voltage
DC12V
DC24V
AC110V 50/60Hz
AC220V 50/60Hz

Product features:

VF Series directional 5/2 way valve include pilot valve and air valve,the valve body from 1/4" to 3/8" with both flying leads type and DIN type coil,Installed on suitable manifold,many valves can working together.

Specifications

Working Medium	Clean air(40μm Filteration)
Acting type	Pilot type
Sectional area	17.1mm²
Working Pressure	0.15~0.8Mpa
Guaranteed.pressure	1.2Mpa
Working Temperature	-10~60℃
Voltage Range	-15%~10%
Standard voltage	AC:110V,220V,DC:12V,24V
Insulation	Class F
Protective Class	IP65
Max. acting frequency	5 cycles/s
Activate time	<0.05
Seal	Anti-dust
Manual operation	Screwdriver locked type

VPC PNEUMATIC®
IS09001 CE

VF Series Solenoid Valve

Main Dimensions

VF3120-02

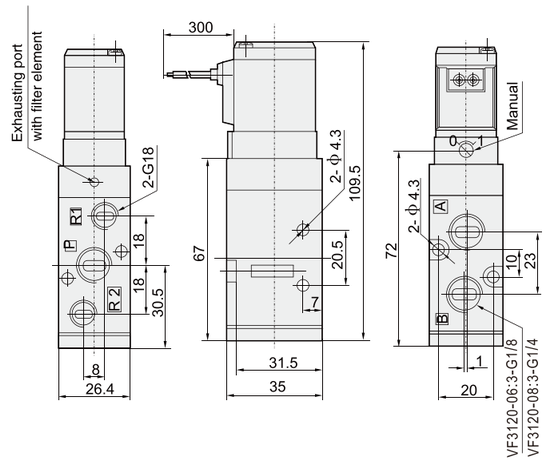

VF3220-02

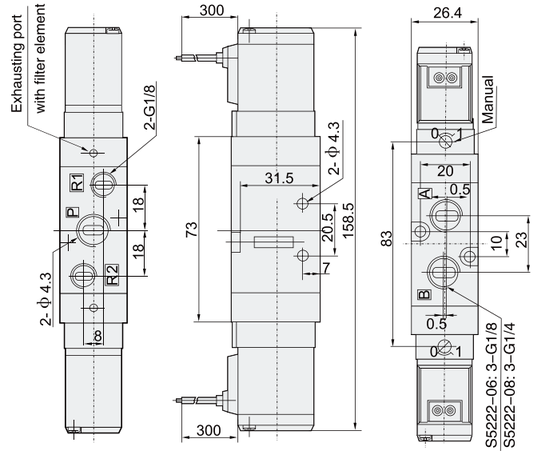

VF5120-03

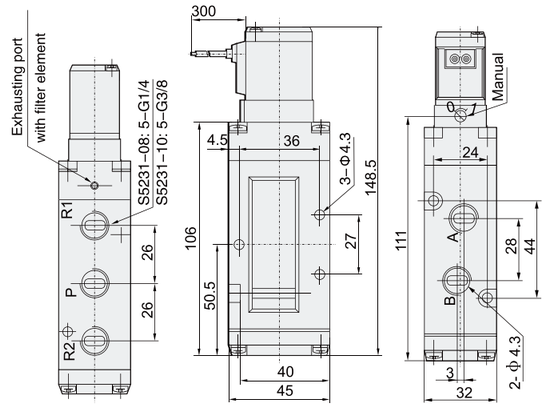

VF5220-03

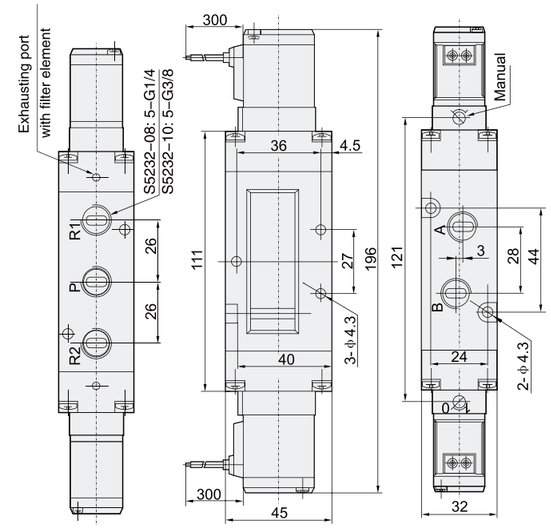

3M Series Solenoid Valve





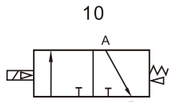

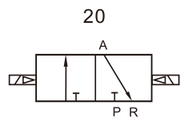

Ordering Code 3M Series Solenoid Valve(2 Position 3 Port)

3 M | 2 | 1 0 | - | 0 8 | - | □ | - | A C 2 2 0 V

- 3M — Type Code: 3M: 3Port, 2Position
- 2 — Series Code: 1:100 Series; 2:200 Series; 3:300 Series; 4:400 Series
- 10 — Coil: 10:Single control; 20:Double control
- 08 — Joint Size: M5:M5; 06:G1/8″; 08:G1/4″; 10:G3/8″; 15:G1/2″
- □ — Coil Type: Blank: Din type; I: Fly leads
- AC220V — Standard Voltage: DC12V; DC24V; AC24V 50/60Hz; AC110V 50/60Hz; AC220V 50/60Hz; AC380V 50/60Hz

Specifications

Model	3M110-M5	3M110-06	3M210-06	3M210-08	3M310-08	3M310-10	3M410-10	3M410-15
	3M120-M5	3M120-06	3M220-06	3M220-08	3M320-08	3M320-10	3M420-10	3M420-15
Working Medium	Clean air(40μm Filteration)							
Acting Type	Internal Guide							
Joint Size	Import=M5 Export=M5	Import=1/8 Export=1/8	Import=1/8 Export=1/8	Import=1/4 Export=1/4	Import=1/4 Export=1/4	Import=3/8 Export=3/8	Import=3/8 Export=3/8	Import=1/2 Export=1/2
Sectional Area	5. 5mm² (CV=0.31)	12mm² (CV=0.67)	14mm² (CV=0.78)	16mm² (CV=0.89)	25mm² (CV=1. 4)	30mm² (CV=1.68)	30mm² (CV=1.68)	50mm² (CV=2.79)
Working Pressure	0.15~0.9Mpa							
Max.Pressure	1.2Mpa							
Working Temperature	-5~60℃							
Voltage Range	-15%~10%							
Heat Resistant Grade	B							
Protective Class	IP65(DIN40050)							
Coil Type	Din type、Flying leads							
Max.Acting Frequency	4Times/S							

3M Series Solenoid Valve

Main Dimensions

2 Position 3 Port Single Control

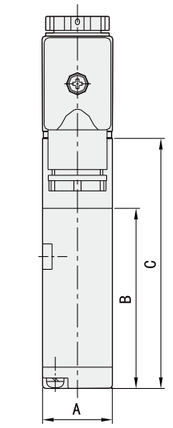

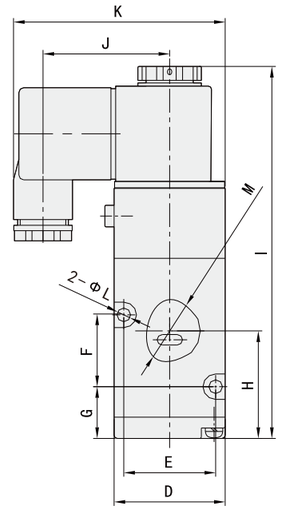

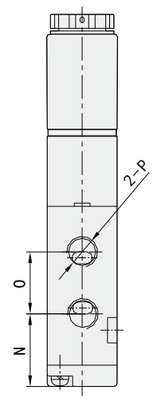

2 Position 3 Port Double Control

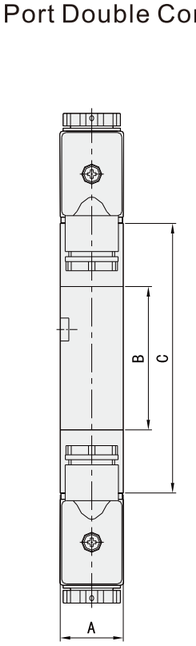

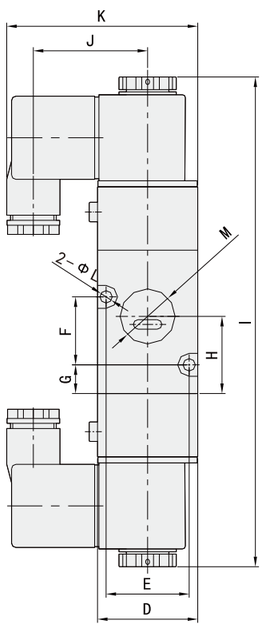

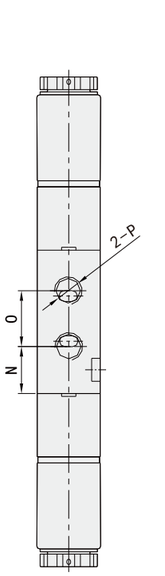

Modle \ Sign	A	B	C	D	E	F	G	H	I	J	K	L	M	N	O	P
3M110-06	18	38	65	27	22	14	12.5	26.5	92	32.5	54	Φ3.3	Φ13.6Depth1.5	19.5	14	G1/8″
3M120-06	18	38	79	27	22	14	6	20	133	32.5	54	Φ3.3	Φ13.6Depth1.5	13	14	G1/8″
3M210-08	22	45	75.5	35	29	20	12	27.5	112	40.5	67.5	Φ4.3	Φ17.6Depth1.5	22	18	G1/4″
3M220-08	22	45	93	35	29	20	5.5	21	166	40.5	67.5	Φ4.3	Φ17.6Depth1.5	15.5	18	G1/4″
3M310-10	27	60	93.5	40	32	24	14	38	130	40.5	70	Φ5.2	Φ19.5Depth1.5	26.8	21.5	G3/8″
3M320-10	27	60	112	40	32	24	-	30.5	185	40.5	70	Φ5.2	Φ19.5Depth1.5	19.3	21.5	G3/8″
3M410-15	34	70	105	50	41	33	-	-	141	-	74.2	Φ6	Φ21.8Depth1.8	29.5	29.5	G1/2″
3M420-15	34	70	105	50	41	33	7.5	-	197	-	74.2	Φ6	Φ21.8Depth1.8	22	29.5	G1/2″

4M Series Solenoid Valve



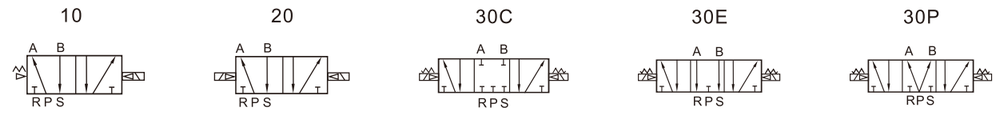

Ordering Code — 4M Series Solenoid Valve(2 Position 5 Port)

4M - 2 - 10 - 08 - □ - AC220V

Type Code
4M: 5Port, 2Position

Series Code
1:100 Series
2:200 Series
3:300 Series
4:400 Series

Coil
10:Single control
20:Double control
30C:Double control 3Position Center Close
30E:Double control 3Position Center Exhaust
30P:Double control 3Position Center Pressure

Joint Size
M5:M5
06:G1/8″
08:G1/4″
10:G3/8″
15:G1/2″

Coil Type
Blank: Din type
I: Fly leads

Standard Voltage
DC12V
DC24V
AC24V 50/60Hz
AC110V 50/60Hz
AC220V 50/60Hz
AC380V 50/60Hz

Specifications

Model	4M110-M5	4M110-06	4M210-06	4M210-08	4M310-08	4M310-10	4M410-10	4M410-15
	4M120-M5	4M120-06	4M220-06	4M220-08	4M320-08	4M320-10	4M420-10	4M420-15
Working Medium	Clean air(40μm Filteration)							
Acting Type	Internal Guide							
Joint Size	Import=M5 Export=M5	Import=1/8 Export=1/8	Import=1/8 Export=1/8	Import=1/4 Export=1/8	Import=1/4 Export=1/4	Import=1/4 Export=3/8	Import=3/8 Export=3/8	Import=1/2 Export=1/2
Sectional Area	5. 5mm² (CV=0.31)	12mm² (CV=0.67)	14mm² (CV=0.78)	16mm² (CV=0.89)	25mm² (CV=1. 4)	30mm² (CV=1.68)	30mm² (CV=1.68)	50mm² (CV=2.79)
Working Pressure	0.15~0.9Mpa							
Max.Pressure	1.2Mpa							
Working Temperature	-5~60℃							
Voltage Range	-15%~10%							
Heat Resistant Grade	B							
Protective Class	IP65(DIN40050)							
Coil Type	Din type、Flying leads							
Max.Acting Frequency	4Times/S							

4M Series Solenoid Valve

Main Dimensions

2 Position 5 Port Single Control

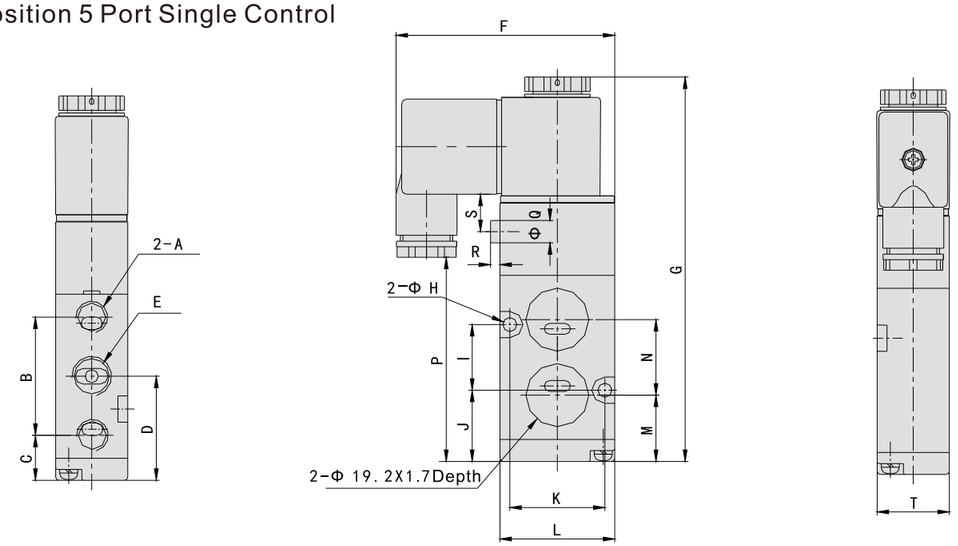

2 Position 5 Port Double Control

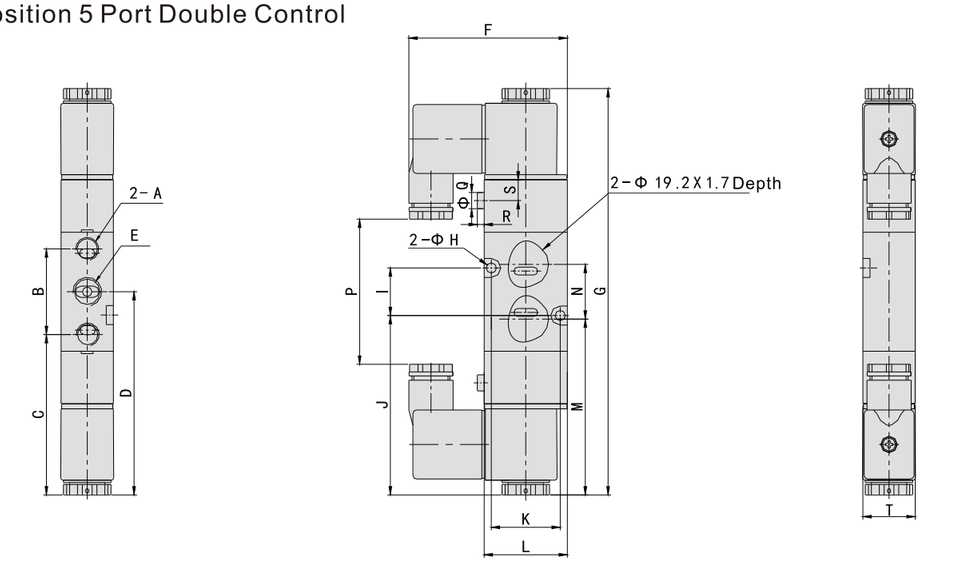

Modle \ Sign	A	B	C	D	E	F	G	H	I	J	K	L	M	N	P	Q	R	S	T
4M110-06	G1/8	30	15.2	30.2	G1/8	55.0	103.4	3.3	16	27.2	21	27	-	16	-	-	-	-	-
4M120-06	G1/8	30	58.2	73.2	G1/8	55.0	146.4	3.3	16	65.0	21	27	-	16	-	-	-	-	-
4M210-08	G1/8	36	13.7	31.7	G1/4	66.5	119.0	4.3	20	21.7	29	35	20.2	23	62.4	4	1	11	22
4M220-08	G1/8	36	67.0	85.0	G1/4	66.5	176.0	4.3	20	75.0	29	35	73.5	23	62.4	4	1	11	22
4M310-10	G1/4	45	17.0	39.5	G3/8	69.0	138.0	5.2	24	27.5	32	40	29.0	22	80.2	4	1	11	27
4M320-10	G1/4	45	72.0	94.5	G3/8	69.0	195.0	5.2	24	83.7	32	40	82.5	22	80.2	4	1	11	27
4M410-15	G1/2	63	22.5	52.0	G1/2	75.0	166.0	5.5	32	38.0	42	50	35.5	37	110	4	1	11	34
4M420-15	G1/2	63	77.0	112.5	G1/2	75.0	225.0	5.5	32	94.5	42	50	92.0	37	112	4	1	11	34

3A Series Air Control Valve







Product features:

* Stable life cycle,guaranteed 10,000,0000 times;
* Various voltage and working style are available;
* Different surface treatment,thread types (G、NPT、PT、BSPP、BSPT)are available.

10-NC



10-NO



20



Ordering Code 3A Series Air Control Valve(2 Position 3 Port)

3A	2	10	-	08	-	NO
Type Code	Series Code	Ways		Joint Size		Control Type

Type Code
3A: 3Port, 2Position

Series Code
1:100 Series
2:200 Series
3:300 Series
4:400 Series

Ways
10:Single control
20:Double control

Joint Size
M5:M5
06:G1/8″
08:G1/4″
10:G3/8″
15:G1/2″

Control Type
Blank: Normal Close
NO: Normal Open

3A Series Air Control Valve

Specifications 3A Series Air Control Valve(2 Position3 Port Single Control)

Model	3A110-M5	3A110-06	3A210-06	3A210-08	3A310-08	3A310-10	3A410-10	3A410-15
Working Medium	Clean air(40μm Filteration)							
Acting Type	Internal Guide							
Joint Size	Import=M5 Export=M5	Import=1/8 Export=1/8	Import=1/8 Export=1/8	Import=1/4 Export=1/4	Import=1/4 Export=1/4	Import=3/8 Export=3/8	Import=3/8 Export=3/8	Import=1/2 Export=1/2
Sectional Area	5. 5mm² (CV=0.31)	12mm² (CV=0.67)	14mm² (CV=0.78)	16mm² (CV=0.89)	25mm² (CV=1. 4)	30mm² (CV=1.68)	30mm² (CV=1.68)	50mm² (CV=2.79)
Working Pressure	0.15~0.8Mpa							
Max.Pressure	1.2Mpa							
Working Temperature	-5~60℃							
Ways	2 Position3 Port							
Body Material	Aluminum							
Lubrication	No							
Max.Acting Frequency	5Times/S				4Times/S		3Times/S	

Main Dimensions

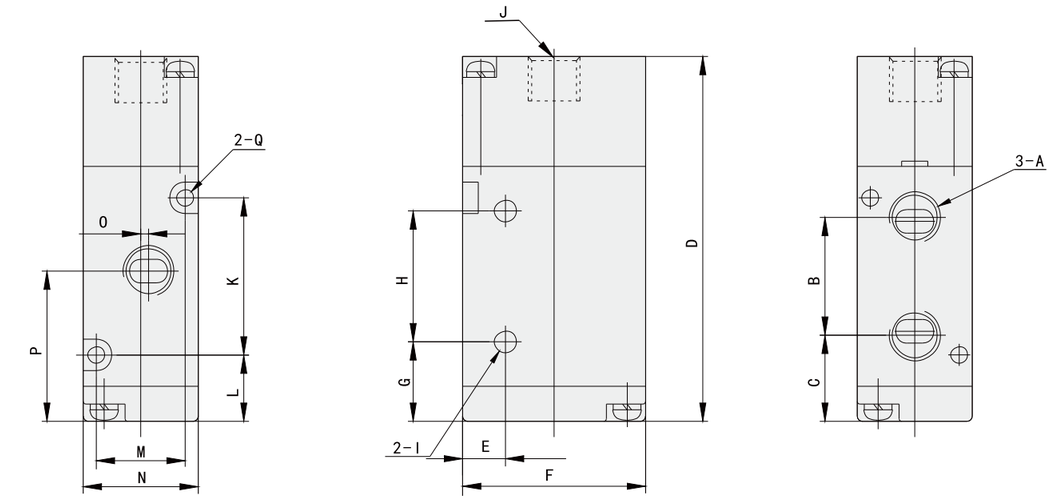

Modle \ Sign	A	B	C	D	E	F	G	H	I	J	K	L	M	N	O	P	Q
3A110-M5	M5x0. 8	16	14	56. 5	7. 7	27	11. 5	21	3. 3	1/8	19	12. 5	13	18	1	23	3. 3
3A110-06	1/8″	16	14	56. 5	7. 7	27	11. 5	21	3. 3	1/8	19	12. 5	13	18	1	23	3. 3
3A210-06	1/8″	22. 5	16	70	8	35	15	25	4. 3	1/8	30	12. 5	17	22	0	27. 5	3. 2
3A210-08	1/4″	22. 5	16	70	8	35	15	25	4. 3	1/8	30	12. 5	17	22	0	27. 5	3. 2
3A310-08	1/4″	24	20. 5	80. 5	10. 5	40	17. 5	30	4. 3	1/8	35	15	20	27	0	32. 5	4. 3
3A310-10	3/8″	24	20. 5	80. 5	10. 5	40	17. 5	30	4. 3	1/8	35	15	20	27	0	32. 5	4. 3
3A410-10	3/8″	36	19. 5	100. 5	13. 5	50	20	48	4. 3	1/8	48	13. 5	27	34	2	42. 5	4. 3
3A410-15	1/2″	36	19. 5	100. 5	13. 5	50	20	48	4. 3	1/8	48	13. 5	27	34	2	42. 5	4. 3

3A Series Air Control Valve

Specifications 3A Series Air Control Valve(2 Position3 Port Double Control)

Model	3A120-M5	3A120-06	3A220-06	3A220-08	3A320-08	3A320-10	3A420-10	3A420-15
Working Medium	Clean air(40μm Filteration)							
Acting Type	Internal Guide							
Joint Size	Import=M5 Export=M5	Import=1/8 Export=1/8	Import=1/8 Export=1/8	Import=1/4 Export=1/4	Import=1/4 Export=1/4	Import=3/8 Export=3/8	Import=3/8 Export=3/8	Import=1/2 Export=1/2
Sectional Area	5. 5mm² (CV=0.31)	12mm² (CV=0.67)	14mm² (CV=0.78)	16mm² (CV=0.89)	25mm² (CV=1. 4)	30mm² (CV=1.68)	30mm² (CV=1.68)	50mm² (CV=2.79)
Working Pressure	0.15~0.8Mpa							
Max.Pressure	1.2Mpa							
Working Temperature	-5~60℃							
Ways	2 Position3 Port							
Body Material	Aluminum							
Lubrication	No							
Max.Acting Frequency	5Times/S				4Times/S		3Times/S	

Main Dimensions

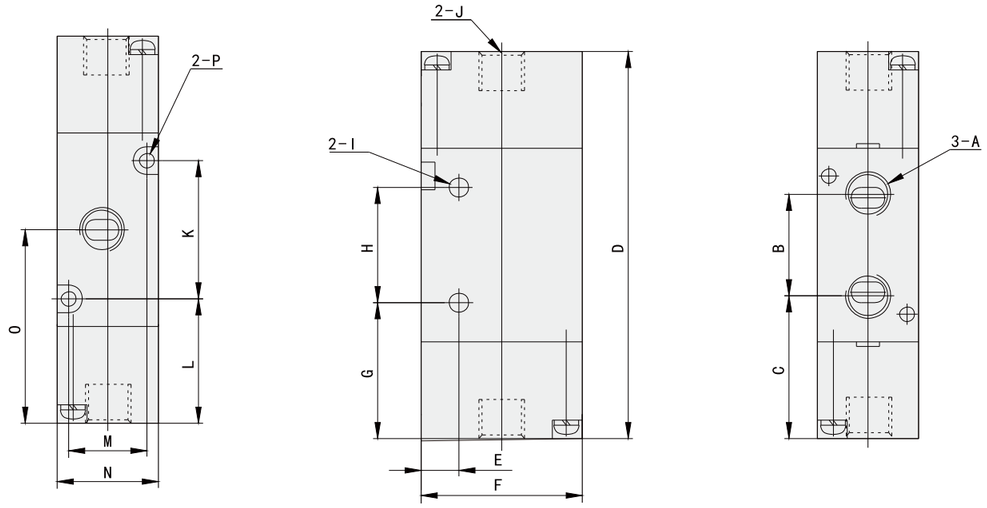

Model / Sign	A	B	C	D	E	F	G	H	I	J	K	L	M	N	O	P
3A120-M5	M5x0. 8	16	26. 5	69	7. 7	27	24	21	3. 3	1/8	19	25	13	18	34. 5	3. 3
3A120-06	1/8″	16	26. 5	69	7. 7	27	24	21	3. 3	1/8	19	25	13	18	34. 5	3. 3
3A220-06	1/8″	22. 5	30. 75	84	8	35	29. 5	25	4. 3	1/8	30	27	17	22	42	3. 2
3A220-08	1/4″	22. 5	30. 75	84	8	35	29. 5	25	4. 3	1/8	30	27	17	22	42	3. 2
3A320-08	1/4″	24	36	96	10. 5	40	33	30	4. 3	1/8	35	30. 5	20	27	48	4. 3
3A320-10	3/8″	24	36	96	10. 5	40	33	30	4. 3	1/8	35	30. 5	20	27	48	4. 3
3A420-10	3/8″	36	40	116	13. 5	50	33	48	4. 3	1/8	48	34	27	34	58	4. 3
3A420-15	1/2″	36	40	116	13. 5	50	33	48	4. 3	1/8	48	34	27	34	58	4. 3

4A Series Air Control Valve



Product features:

* Stable life cycle,guaranteed 10,000,0000 times;
* Various voltage and working style are available;
* Different surface treatment,thread types (G、NPT、PT、BSPP、BSPT)are available.





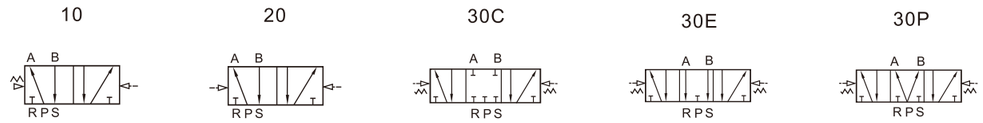

Ordering Code 4A Series Air Control Valve

4A	2	10	-	08
Type Code	Series Code	Ways		Joint Size
4A: 5Port, 2Position	1:100 Series 2:200 Series 3:300 Series 4:400 Series	10:Single control 20:Double control 30C:Double control 3Position Center Close 30E:Double control 3Position Center Exhaust 30P:Double control 3Position Center Pressure		M5:M5 06:G1/8″ 08:G1/4″ 10:G3/8″ 15:G1/2″

4A Series Air Control Valve

Specifications 4A Series Air Control Valve(2 Position 5 Port Single Control)

Model	4A110-M5	4A110-06	4A210-06	4A210-08	4A310-08	4A310-10	4A410-10	4A410-15
Working Medium	Clean air(40μm Filteration)							
Acting Type	Internal Guide							
Joint Size	Import=M5 Export=M5 Exhaust=M5	Import=1/8 Export=1/8 Exhaust=1/8	Import=1/8 Export=1/8 Exhaust=1/8	Import=1/4 Export=1/4 Exhaust=1/8	Import=1/4 Export=1/4 Exhaust=1/4	Import=3/8 Export=3/8 Exhaust=1/4	Import=3/8 Export=3/8 Exhaust=3/8	Import=1/2 Export=1/2 Exhaust=1/2
Sectional Area	5. 5mm² (CV=0.31)	12mm² (CV=0.67)	14mm² (CV=0.78)	16mm² (CV=0.89)	25mm² (CV=1. 4)	30mm² (CV=1.68)	30mm² (CV=1.68)	50mm² (CV=2.79)
Working Pressure	0.15~0.8Mpa							
Max.Pressure	1.2Mpa							
Working Temperature	-5~60℃							
Ways	2 Position5 Port							
Body Material	Aluminum							
Lubrication	No							
Max.Acting Frequency	5Times/S				4Times/S		3Times/S	

Main Dimensions

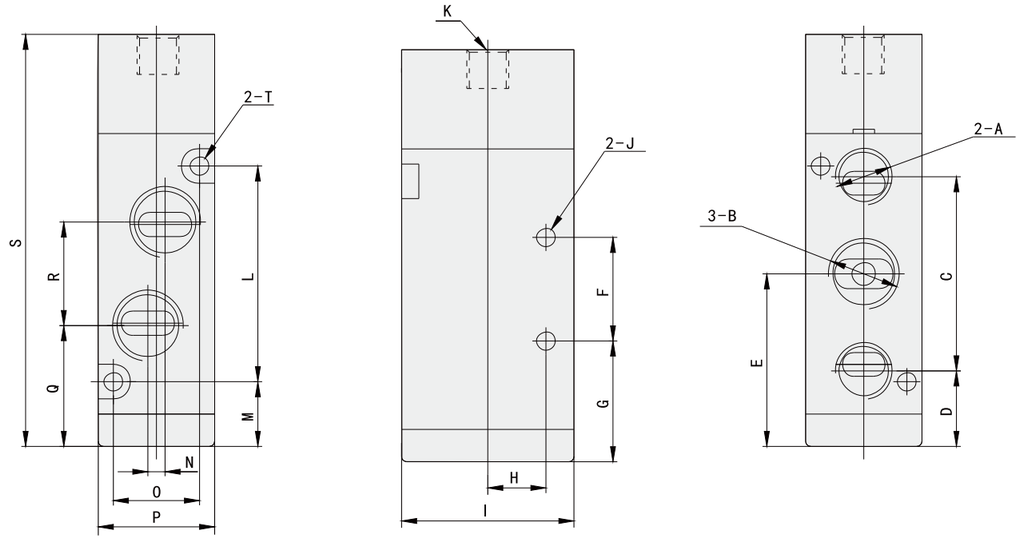

Model \ Sign	A	B	C	D	E	F	G	H	I	J	K	L	M	N	O	P	Q	R	S	T
4A110-M5	M5x0. 8	M5x0. 8	27	14. 7	28. 2	14	21. 2	9. 5	27	3. 3	1/8″	30	13. 2	0	13	18	21. 2	14	68. 7	3. 3
4A110-06	1/8″	1/8″	28	14. 2	28. 2	14	21. 2	9. 5	27	3. 3	1/8″	30	13. 2	3	13	18	20. 2	16	68. 7	3. 3
4A210-06	1/8″	1/8″	36	13. 7	31. 7	20	21. 7	10. 5	35	4. 3	1/8″	38	12. 7	0	17	22	22. 7	18	77. 7	3. 2
4A210-08	1/8″	1/4″	36	13. 7	31. 7	20	21. 7	10. 5	35	4. 3	1/8″	38	12. 7	3	17	22	21. 2	21	77. 7	3. 2
4A310-08	1/4″	1/4″	45	17. 5	40	24	28	13. 5	40	4. 3	1/8″	50	15	0	20	27	29	22	95. 5	4. 3
4A310-10	1/4″	3/8″	45	17. 5	40	24	28	13. 5	40	4. 3	1/8″	50	15	4	20	27	28	24	95. 5	4. 3
4A410-10	3/8″	3/8″	63	25. 5	57	28	43	17. 5	50	5. 5	1/8″	72	21	4	27	34	39	36	128	4. 3
4A410-15	1/2″	1/2″	63	25. 5	57	28	43	17. 5	50	5. 5	1/8″	72	21	4	27	34	39	36	128	4. 3

IS09001 CE
PNEUMATIC®

4A Series Air Control Valve

Specifications 4A Series Air Control Valve(2 Position 5 Port Double Control)

Model	4A120-M5	4A120-06	4A220-06	4A220-08	4A320-08	4A320-10	4A420-10	4A420-15
Working Medium	Clean air(40μm Filteration)							
Acting Type	Internal Guide							
Joint Size	Import=M5 Export=M5 Exhaust=M5	Import=1/8 Export=1/8 Exhaust=1/8	Import=1/8 Export=1/8 Exhaust=1/8	Import=1/4 Export=1/4 Exhaust=1/8	Import=1/4 Export=1/4 Exhaust=1/4	Import=3/8 Export=3/8 Exhaust=1/4	Import=3/8 Export=3/8 Exhaust=3/8	Import=1/2 Export=1/2 Exhaust=1/2
Sectional Area	5. 5mm² (CV=0.31)	12mm² (CV=0.67)	14mm² (CV=0.78)	16mm² (CV=0.89)	25mm² (CV=1. 4)	30mm² (CV=1.68)	30mm² (CV=1.68)	50mm² (CV=2.79)
Working Pressure	0.15~0.8Mpa							
Max.Pressure	1.2Mpa							
Working Temperature	-5~60℃							
Ways	2 Position5 Port							
Body Material	Aluminum							
Lubrication	No							
Max.Acting Frequency	5Times/S				4Times/S		3Times/S	

Main Dimensions

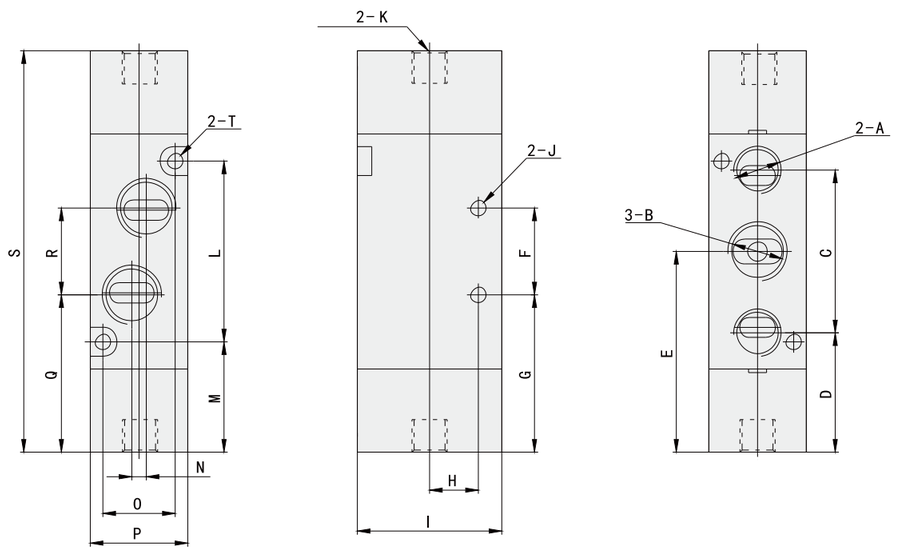

Model \ Sign	A	B	C	D	E	F	G	H	I	J	K	L	M	N	O	P	Q	R	S	T
4A120-M5	M5x0. 8	M5x0. 8	27	27	40. 5	14	33. 5	9. 5	27	3. 3	1/8″	30	25. 5	0	13	18	33. 5	14	81	3. 3
4A120-06	1/8″	1/8″	28	26. 5	40. 5	14	33. 5	9. 5	27	3. 3	1/8″	30	25. 5	3	13	18	33. 5	16	81	3. 3
4A220-06	1/8″	1/8″	36	28	46	20	36	10. 5	35	4. 3	1/8″	38	27	0	17	22	37	18	92	3. 2
4A220-08	1/8″	1/4″	36	28	46	20	36	10. 5	35	4. 3	1/8″	38	27	3	17	22	35. 5	21	92	3. 2
4A320-08	1/4″	1/4″	45	33	55. 5	24	43. 5	13. 5	40	4. 3	1/8″	50	30. 5	0	20	27	44. 5	22	111	4. 3
4A320-10	1/4″	3/8″	45	33	55. 5	24	43. 5	13. 5	40	4. 3	1/8″	50	30. 5	4	20	27	44. 5	24	111	4. 3
4A420-10	3/8″	3/8″	63	39. 5	71	28	57	17. 5	50	5. 5	1/8″	72	35	4	27	34	53	36	142	4. 3
4A420-15	1/2″	1/2″	63	39. 5	71	28	57	17. 5	50	5. 5	1/8″	72	35	4	27	34	53	36	142	4. 3

4A Series Air Control Valve

Specifications 4A Series Air Control Valve(3 Position 5 Port Center Close)

Model	4A130C-M5	4A130C-06	4A230C-06	4A230C-08	4A330C-08	4A330C-10	4A430C-10	4A430C-15
Working Medium	Clean air(40μm Filteration)							
Acting Type	Internal Guide							
Joint Size	Import=M5 Export=M5 Exhaust=M5	Import=1/8 Export=1/8 Exhaust=1/8	Import=1/8 Export=1/8 Exhaust=1/8	Import=1/4 Export=1/4 Exhaust=1/8	Import=1/4 Export=1/4 Exhaust=1/4	Import=3/8 Export=3/8 Exhaust=1/4	Import=3/8 Export=3/8 Exhaust=3/8	Import=1/2 Export=1/2 Exhaust=1/2
Sectional Area	5. 0mm² (CV=0.28)	9. 0mm² (CV=0.50)	12mm² (CV=0.67)	12mm² (CV=0.67)	18mm² (CV=1. 0)	18mm² (CV=1.0)	30mm² (CV=1.68)	30mm² (CV=1.68)
Working Pressure	0.15~0.8Mpa							
Max.Pressure	1.2Mpa							
Working Temperature	-5~60℃							
Ways	3 Position5 Port							
Body Material	Aluminum							
Lubrication	No							
Max.Acting Frequency	3Times/S							

Specifications 4A Series Air Control Valve(3 Position 5 Port Center Exhaust)

Model	4A130E-M5	4A130E-06	4A230E-06	4A230E-08	4A330E-08	4A330E-10	4A430E-10	4A430E-15
Working Medium	Clean air(40μm Filteration)							
Acting Type	Internal Guide							
Joint Size	Import=M5 Export=M5 Exhaust=M5	Import=1/8 Export=1/8 Exhaust=1/8	Import=1/8 Export=1/8 Exhaust=1/8	Import=1/4 Export=1/4 Exhaust=1/8	Import=1/4 Export=1/4 Exhaust=1/4	Import=3/8 Export=3/8 Exhaust=1/4	Import=3/8 Export=3/8 Exhaust=3/8	Import=1/2 Export=1/2 Exhaust=1/2
Sectional Area	5. 0mm² (CV=0.28)	9. 0mm² (CV=0.50)	12mm² (CV=0.67)	12mm² (CV=0.67)	18mm² (CV=1. 0)	18mm² (CV=1.0)	30mm² (CV=1.68)	30mm² (CV=1.68)
Working Pressure	0.15~0.8Mpa							
Max.Pressure	1.2Mpa							
Working Temperature	-5~60℃							
Ways	3 Position5 Port							
Body Material	Aluminum							
Lubrication	No							
Max.Acting Frequency	3Times/S							

4A Series Air Control Valve

Specifications 4A Series Air Control Valve(3 Position 5 Port Center Pressure)

Model	4A130P-M5	4A130P-06	4A230P-06	4A230P-08	4A330P-08	4A330P-10	4A430P-10	4A430P-15
Working Medium	Clean air(40μm Filteration)							
Acting Type	Internal Guide							
Joint Size	Import=M5 Export=M5 Exhaust=M5	Import=1/8 Export=1/8 Exhaust=1/8	Import=1/8 Export=1/8 Exhaust=1/8	Import=1/4 Export=1/4 Exhaust=1/8	Import=1/4 Export=1/4 Exhaust=1/4	Import=3/8 Export=3/8 Exhaust=1/4	Import=3/8 Export=3/8 Exhaust=3/8	Import=1/2 Export=1/2 Exhaust=1/2
Sectional Area	5. 0mm² (CV=0.28)	9. 0mm² (CV=0.50)	12mm² (CV=0.67)	12mm² (CV=0.67)	18mm² (CV=1. 0)	18mm² (CV=1.0)	30mm² (CV=1.68)	30mm² (CV=1.68)
Working Pressure	0.15~0.8Mpa							
Max.Pressure	1.2Mpa							
Working Temperature	-5~60℃							
Ways	3 Position5 Port							
Body Material	Aluminum							
Lubrication	No							
Max.Acting Frequency	3Times/S							

Main Dimensions

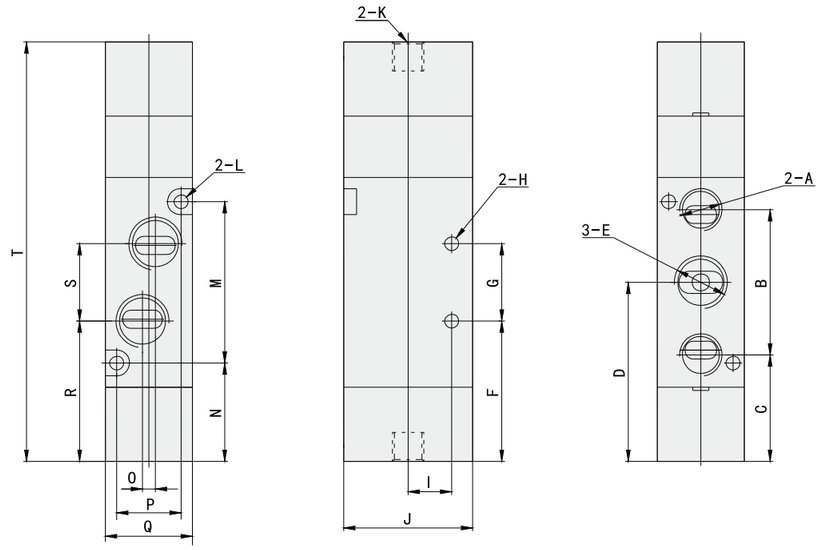

Sign / Modle	A	B	C	D	E	F	G	H	I	J	K	L	M	N	O	P	Q	R	S	T
4A130-M5	M5x0. 8	27	26	40. 5	M5x0. 8	33. 5	14	3. 3	9. 5	27	1/8″	3. 3	30	26. 5	0	13	18	33. 5	14	96
4A130-06	1/8″	28	26	40. 5	1/8″	33. 5	14	3. 3	9. 5	27	1/8″	3. 3	30	26. 5	1	13	18	33. 5	16	96
4A230-06	1/8″	36	28	46	1/8″	36	20	4. 3	10. 5	35	1/8″	3. 2	38	27	0	17	22	37	18	111
4A230-08	1/8″	36	28	46	1/4″	36	20	4. 3	10. 5	35	1/8″	3. 2	38	27	3	17	22	35. 5	21	111
4A330-08	1/4″	45	33	55. 5	1/4″	43. 5	24	4. 3	13. 5	40	1/8″	4. 3	50	30. 5	0	20	27	44. 5	22	130
4A330-10	1/4″	45	33	55. 5	3/8″	43. 5	24	4. 3	13. 5	40	1/8″	4. 3	50	30. 5	4	20	27	44. 5	24	130
4A430-15	1/2″	63	39. 5	71	1/2″	57	28	5. 5	17. 5	50	1/8″	4. 3	72	35	4	27	34	53	36	163

IS09001 CE
VPC PNEUMATIC®



L Series Hand Pull Valve

Ordering Code

L Series Hand Pull Valve(2 Position 3 Port)

3L 2 10 - 08

- 3L — Type Code: 3L: 3Port, 2Position
- 2 — Series Code: 1:100 Series; 2:200 Series; 3:300 Series; 4:400 Series
- 10 — Ways: 10:Single control
- 08 — Joint Size: 06:G1/8″; 08:G1/4″; 10:G3/8″; 15:G1/2″



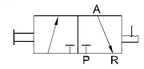

Specifications

Model	3L110-06	3L210-06	3L210-08	3L310-08	3L310-10	3L410-10	3L410-15
Working Medium	Clean air(40μm Filteration)						
Acting Type	Direct Acting						
Joint Size	G1/8"		G1/4"		G3/8"		G1/2"
Ways	2 Position 3 Port						
Lubrication	No						
Working Pressure	0~0.8Mpa						
Max.Pressure	1.5Mpa						
Working Temperature	−20~70℃						
Body Material	Aluminum						
Seal Material	NBR						

Main Dimensions

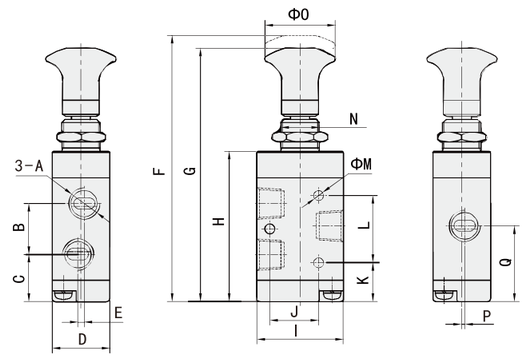

Model	3L110-06	3L210-06	3L210-08	3L310-08	3L310-10	3L410-10	3L410-15
A	G1/8	G1/8	G1/4	G1/4	G3/8	G3/8	G1/2
B	16	18.5	22.5	22	25	33.5	36
C	14.5	18.3	16.3	21.5	20	26	23.5
D	18	22	22	27	27	34	34
E	2	0	0	1	2	0	0
F	83.5	94	94	110	110	138	138
G	79.5	89	89	105	105	133	133
H	44.5	54.5	54.5	63.5	63.5	85	85
I	27	35	35	40	40	50	50
J	19	24	24	28	28	36	36
K	15.5	17.5	17.5	20.5	20.5	28.5	28.5
L	14	20	20	24	24	28	28
M	3.1	4.3	4.3	4.3	4.3	4.3	4.3
N	M14X1	M14X1	M14X1	M14X1	M14X1	M22X2.5	M22X2.5
O	22.5	22.5	22.5	32	32	32	32
P	1	0.5	1.5	1	2	2	2
Q	22.5	27.5	27.5	32.5	32.5	42.5	42.5

L Series Hand Pull Valve

Ordering Code L Series Hand Pull Valve(2 Position 5 Port)

4 L — Type Code: 4L: 5Port, 2Position

2 — Series Code: 1:100 Series; 2:200 Series; 3:300 Series; 4:400 Series

1 0 — Ways: 10:Single control

\- 0 8 — Joint Size: 06:G1/8″; 08:G1/4″; 10:G3/8″; 15:G1/2″



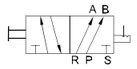

Specifications

Model	4L110-06	4L210-06	4L210-08	4L310-08	4L310-10	4L410-10	4L410-15
	Clean air(40μm Filteration)						
Acting Type	Direct Acting Type						
Joint Size	G1/8"		G1/4"		G3/8"		G1/2"
Ways	2 Position 5 Port						
Lubrication	No						
Working Pressure	0~0.8Mpa						
Max.Pressure	1.5Mpa						
Working Temperature	-20~70℃						
Body Material	Aluminum						
Seal Material	NBR						

Main Dimensions

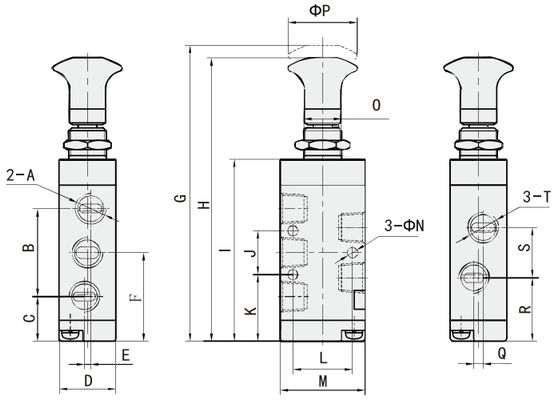

Model	4L110-06	4L210-06	4L210-08	4L310-08	4L310-10	4L410-10	4L410-15
A	G1/8	G1/8	G1/8	G1/4	G1/4	G3/8	G3/8
B	28	35	35	45	45	63	63
C	14	14	14	17.5	17.5	23	23
D	18	22	22	27	27	34	34
E	1	0	0	0	4	0	0
F	28	31.5	31.5	40	40	54.5	54.5
G	95	102	102	119	119	162	162
H	91	98	98	114	114	157	157
I	55.5	62.5	62.5	78.5	78.5	109	109
J	14	20	20	24	24	28	28
K	21	21.5	21.5	28	28	40.5	40.5
L	19	24	24	28	28	36	36
M	27	35	35	40	40	50	50
N	3.3	4.3	4.3	4.3	4.3	5.5	5.5
O	M14X1	M14X1	M14X1	M14X1	M14X1	M22X1.5	M22X1.5
P	22.5	22.5	22.5	32	32	32	32
Q	4	0	3	0	4	0	4
R	20	21.5	22.5	28	28	36.5	36.5
S	16	20	18	24	24	36	35.5
T	G1/8	G1/8	G1/4	G1/4	G3/8	G3/8	G1/2

H Series Hand Push Valve



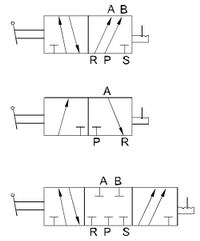

Ordering Code H Series Push Valve

4 H — Type Code: 3H: 3Port, 2Position; 4H: 5Port, 2(3) Position

2 — Series Code: 1:100 Series; 2:200 Series; 3:300 Series; 4:400 Series

1 0 — Ways: 10:Single Control; 30C:Double Control Center Pressure

\- 0 8 — Joint Size: M5:M5; 06:G1/8″; 08:G1/4″; 10:G3/8″; 15:G1/2″

Product Features

* Manual operated;
* Various working styles are available;

Specifications

Modle	Joint Size	Sectional Area	Working Medium	Working Pressure	Max. Pressure	Working Temperature	Body Material	Lubrication
3H110-06	G1/8"	12mm²(CV=0.67)	Clean air	0~1.0 Mpa	1.5 Mpa	-10~60℃	Aluminum	No
3H210-06	G1/8"	14mm²(CV=0.78)						
3H210-08	G1/4"	16mm²(CV=0.89)						
3H310-08	G1/4"	25mm²(CV=1.39)						
3H310-10	G3/8"	30mm²(CV=1.67)						
3H410-10	G3/8"	40mm²(CV=2.23)						
3H410-15	G1/2"	50mm²(CV=2.79)						
4H110-06	G1/8"	12mm²(CV=0.67)						
4H210-06	G1/8"	14mm²(CV=0.78)						
4H210-08	G1/4"	16mm²(CV=0.89)						
4H310-08	G1/4"	25mm²(CV=1.39)						
4H310-10	G3/8"	30mm²(CV=1.67)						
4H410-10	G3/8"	40mm²(CV=2.23)						
4H410-15	G1/2"	50mm²(CV=2.79)						
4H130C-06	G1/8"	9mm²(CV=0.50)						
4H230C-08	G1/4"	12mm²(CV=0.67)						
4H330C-10	G3/8"	18mm²(CV=1.00)						
4H430C-15	G1/2"	30mm²(CV=1.67)						

H Series Hand Push Valve

Main Dimensions

3Port, 2Position Hand Push Valve

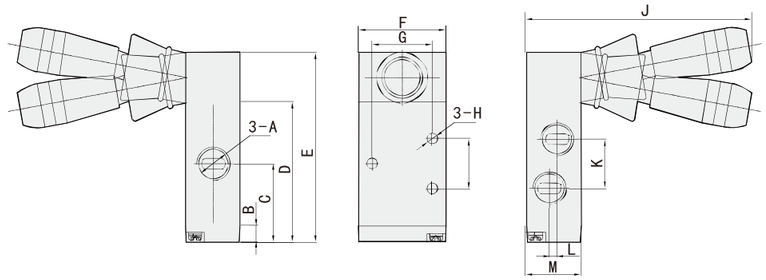

Modle	A	B	C	D	E	F	G	H	I	J	K	L	M
3H110-06	G1/8	6.5	22.5	38.5	58.5	27	19	3.3	14	87.7	16	2	18
3H210-08	G1/4	6.5	27.5	40.5	68.5	35	24	4.3	20	91.5	22.5	0	22
3H310-10	G3/8	7.5	32.5	57.5	77.5	40	28	4.3	24	99.3	25	2	27
3H410-15	G1/2	7.5	42.5	77.5	105.5	50	36	4.3	28	107	36	0	34

5Port, 2Position Hand Push Valve

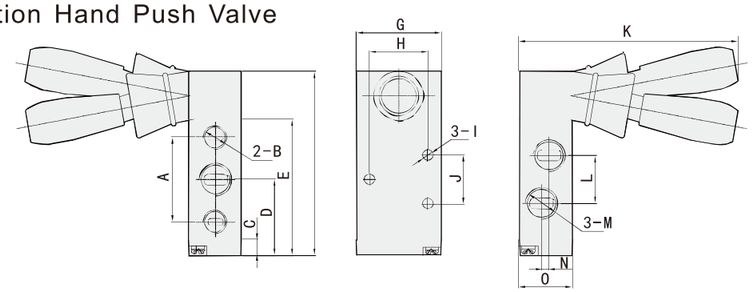

Modle	A	B	C	D	E	F	G	H	I	J	K	L	M	N	O
4H110-06	28	G1/8	6.5	28	49.5	69.5	27	19	3.3	14	87.5	16	G1/8	3	18
4H210-06	35	G1/4	6.5	31.5	76.5	76.5	35	24	4.3	20	90	20	G1/4	3	22
4H310-08	45	G3/8	7.5	40	92.5	92.5	40	28	4.3	24	96.5	24	G3/8	4	27
4H410-08	63	G1/2	7.5	54.5	129.5	129.5	50	36	5.5	28	105	36	G1/2	4	34

5Port, 3Position Center Pressure Hand Push Valve

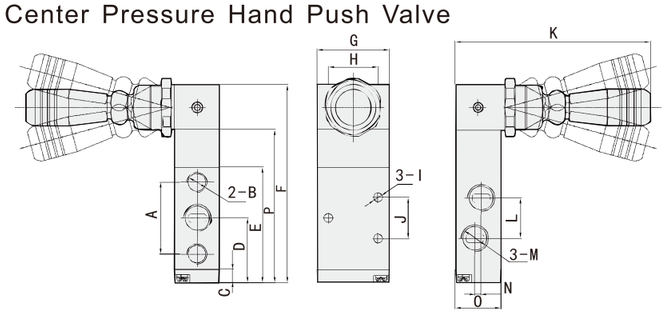

Modle	A	B	C	D	E	F	G	H	I	J	K	L	M	N	O	P
4H130C-06	28	G1/8	6.5	28	49.5	84.5	27	19	Φ3.5	14	94.5	16	G1/8	3	18	64.5
4H230C-08	35	G1/4	6.5	31.5	56.5	97	35	24	Φ4.3	20	95.5	20	G1/4	3	22	75
4H330C-10	44	G3/8	7.5	40	72.5	113.5	40	28	Φ4.3	24	100	24	G3/8	4	27	91.5
4H430C-15	63	G1/2	7.5	54.5	101.5	152	50	36	Φ5.5	28.5	108	35	G1/2	4	34	124

IS09001 CE
VPC PNEUMATIC®

M Series Mechanical Valve

Ordering Code

M Series Mechanical Valve

M — Type Code: M:Mechanical Valve

5 — Series Code: 5:5Port, 3:3Port, 2:2Port

2 — Ways: 2:2Position

2 — Joint Size: 1:G1/8″, 2:G1/4″

\-

R — Button Type: Blank:Basic; R:Rolling wheel; PP:Flat button; PPL:Convex button; PB:Big head button; EB:Button with the lock; TB:Selection button

Specifications

Model	M221	M322	M522
Working Medium	Clean air(40μm Filteration)		
Control Mode	Mechanical Control/Manual Control		
Lubrication	No		
Working Pressure	0.15~0.8Mpa		
Max.Pressure	1.2Mpa		
Working Temperature	-5~80℃		
Joint Size	G1/8"、G1/4"		

Main Dimensions

TB:Selection button

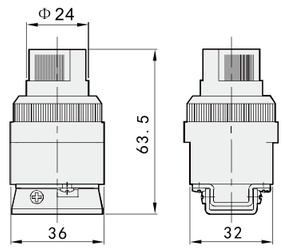

R:Rolling wheel

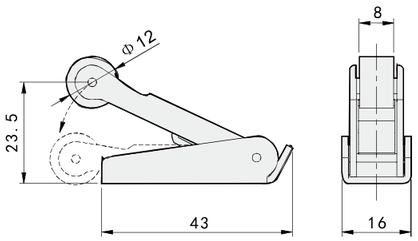

EB:Button with the lock

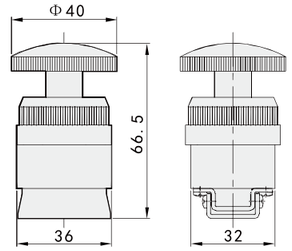

PPL:Convex button

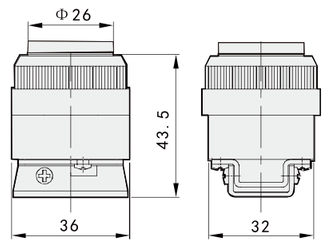

PP:Flat button

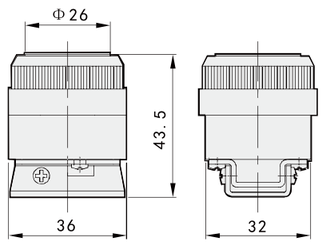

PB:Big head button

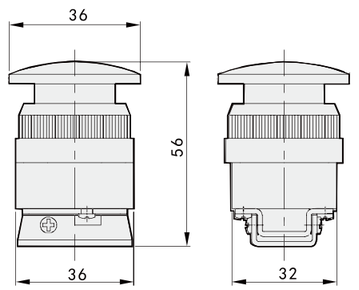

M Series Mechanical Valve

M221 Series

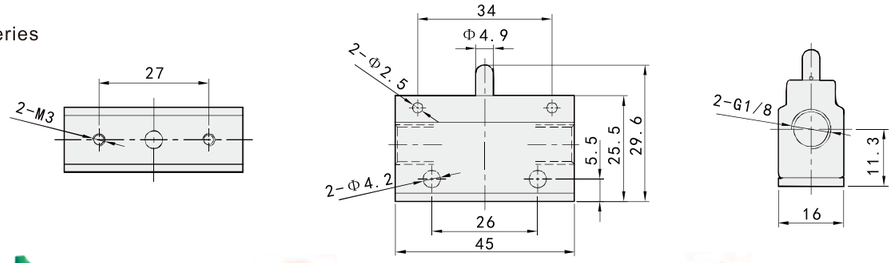



M221-TB M221-R M221-EB M221-PPL M221-PP M221-PB

M322 Series

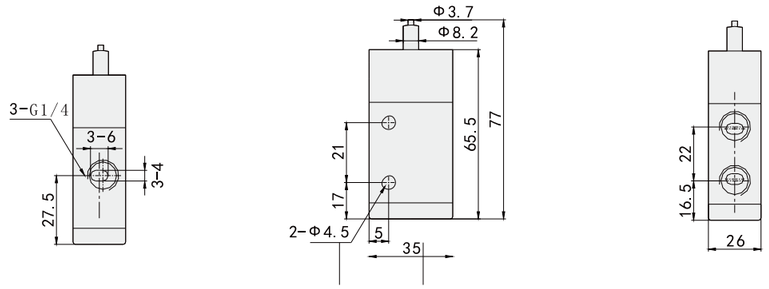



M322-TB M322-R M322-EB M322-PPL M322-PP M322-PB M322

M522 Series

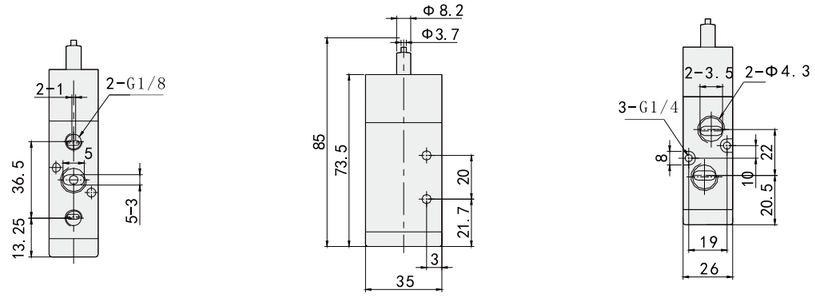



M522-TB M522-R M522-EB M522-PPL M522-PP M522-PB M522

4HV Series Rotary Valve

Ordering Code 4HV Series Rotary Valve

4 H V 2 10 - 06 - S

- Type Code: 4HV:Rotary valve
- Series Code: 2:2 Series; 3:3 Series; 4:4 Series
- Ways: 10:4Port, 2Position; 30:4Port, 3Position Center Close
- Joint Size: 06:G1/8″; 08:G1/4″; 10:G3/8″; 15:G1/2″; 20:G3/4″
- Installation Type: Blank:Panel Installation; S:Body Installation



Body Installation Panel Installation

4Port, 2Position



4Port, 3Position Center Close

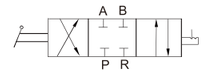

Specifications

Model	4HV2□□-06	4HV2□□-08	4HV3□□-08	4HV3□□-10	4HV4□□-15	4HV4□□-20
Working Medium	Clean air(40μm Filteration)					
Acting Type	External Control					
Joint Size	G1/8"	G1/4"		G3/8"	G1/2"	G3/4"
Sectional Area	14mm² (CV=0.78)	16mm² (CV=0.89)	30mm² (CV=1.67)	33mm² (CV=1.83)	88mm² (CV=4.89)	95mm² (CV=5.27)
Ways	4Port, 2Position, 4Port, 3Position					
Working Pressure	0~1.0Mpa					
Max.Pressure	1.5Mpa					
Working Temperature	-20~70℃					
Working Angle	90°					

Main Dimensions

Body Installation

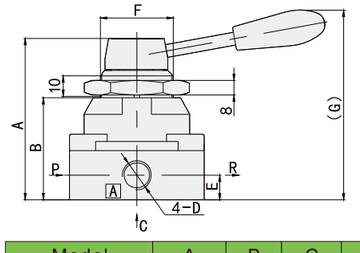

Panel Installation

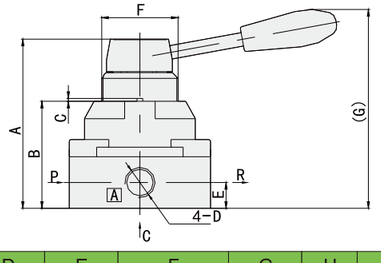

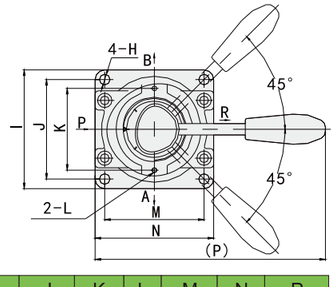

Model	A	B	C	D	E	F	G	H	I	J	K	L	M	N	P
4HV2□□-06	72.6	45	1.5	G1/8	11.5	M34X1.5	92.5	5	62	49	40	3	49	62	120
4HV2□□-08	72.6	45	1.5	G1/4	11.5	M34X1.5	92.5	5	62	49	40	3	49	62	120
4HV3□□-08	88.5	56	1.5	G1/4	13.5	M40X1.5	104	6.6	74	62	51	3	62	74	140
4HV3□□-10	88.5	56	1.5	G3/8	13.5	M40X1.5	104	6.6	74	62	51	3	62	74	140
4HV4□□-15	110.3	72	2	G1/2	18	M52X1.5	126	6.6	102	89	64	3	81	94	160
4HV4□□-20	110.3	72	2	G3/4	18	M52X1.5	126	6.6	102	89	64	3	81	94	160

HV Series Rotary Valve

Ordering Code HV Series Rotary Valve

H V | 2 | 1 0 | - | 0 8 | □

- Type Code: HV: Rotary Valve
- Series Code: 2: 2 Series
- Ways: 10: 4Port, 3Position
- Joint Size: 08:G1/4″ 10:G3/8″ 15:G1/2″
- Blank:ALL sides connect,basic type
  H:All sides connect,handle type
  P:Two sides connect,basic type
  M:Two sides connect,mini type
  D:Bottom connect type

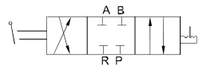

4Port, 3Position Rotary Valve

Specifications

Model	HV210-08		HV210-08H		HV210-08P	HV210-08M	HV210-08D
	HV210-10		HV210-10H				
	HV210-15		HV210-15H				
Working Medium	Clean air(40μm Filteration)						
Acting Type	External Control						
Joint Size	HV210-08	G1/4"	HV210-08H	G1/8"	G1/4"	G1/4"	G1/4"
	HV210-10	G3/8"	HV210-10H	G1/4"			
	HV210-15	G1/2"	HV210-15H	G3/8"			
Ways	4Port, 3Position						
Lubrication	No						
Working Pressure	0~1.0Mpa						
Max.Pressure	1.5Mpa						
Working Temperature	-20~70℃						
Working Angle	90°						

Main Dimensions

HV210-08 HV210-10 HV210-15



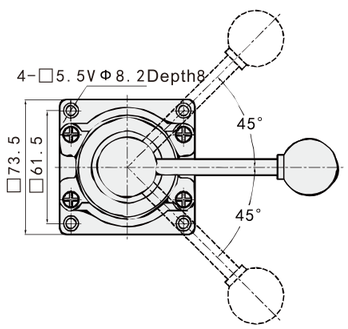

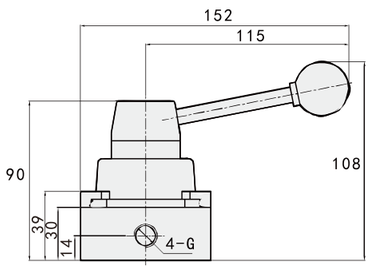

Modle	G
HV210-08	G1/4
HV210-10	G3/8
HV210-15	G1/2

IS09001 CE
VPC PNEUMATIC®

HV Series Rotary Valve

HV210-08H / HV210-10H / HV210-15H



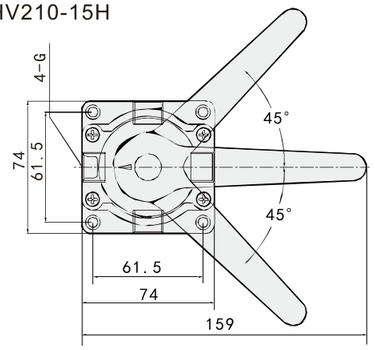

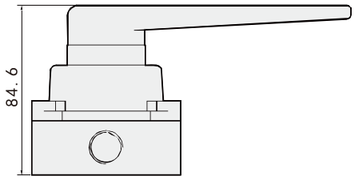

Modle	G
HV210-08H	G1/4
HV210-10H	G3/8
HV210-15H	G1/2

HV210-08P



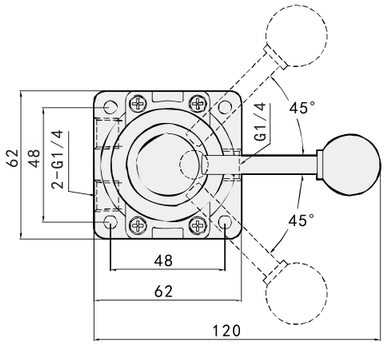

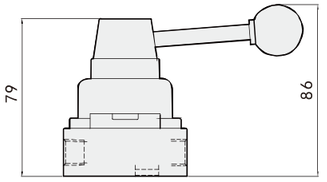

HV210-08M



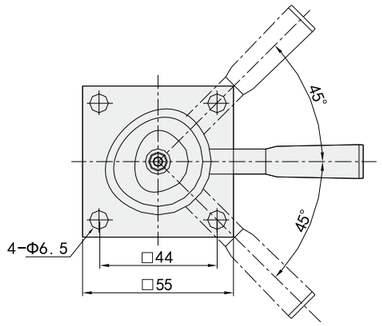

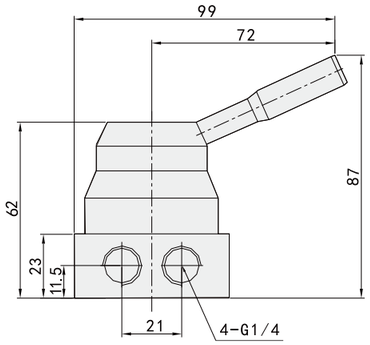

HV210-08D



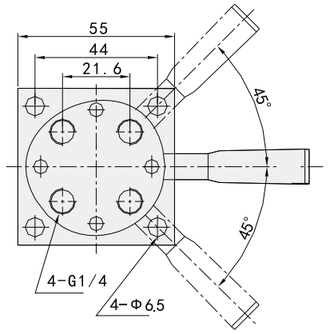

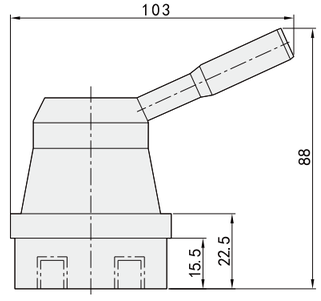

F Series Foot Pedal Valve

Ordering Code F Series Foot Pedal Valve

4F210 - 08 L

- 4F210 — Type Code
  - 3F210: 3Port, 2Position
  - 4F210M: 4Port, 2Position
  - 4F210: 5Port, 2Position
- 08 — Joint Size
  - 08: G1/4″
- L
  - Blank: Standard
  - L: With Lock
  - C: With Cover
  - LC: With Lock&Cover

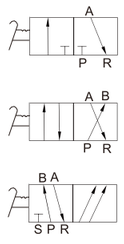

Specifications

Model	3F210-08	4F210-08M	4F210-08	4F210-08L	4F210-08C	4F210-08LC
Working Medium	Clean air(40μm Filteration)					
Acting Type	External Control					
Ways	3Port, 2Position	4Port, 2Position	5Port, 2Position			
Working Pressure	0~0.7Mpa		0~0.7Mpa			
Max.Pressure	1.2Mpa					
Working Temperature	-5~60℃		-5~60℃			
Joint Size	G1/4"					

Main Dimensions

3F210-08



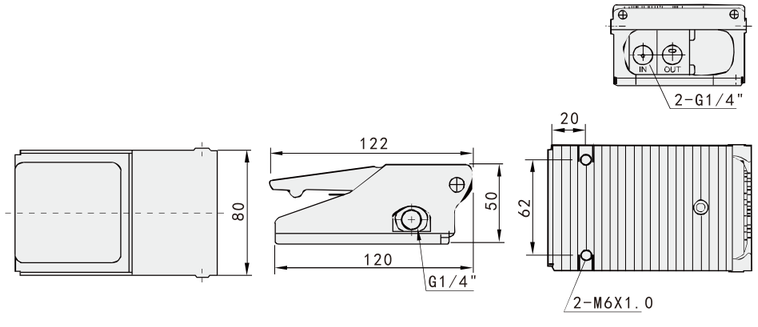

4F210-08M



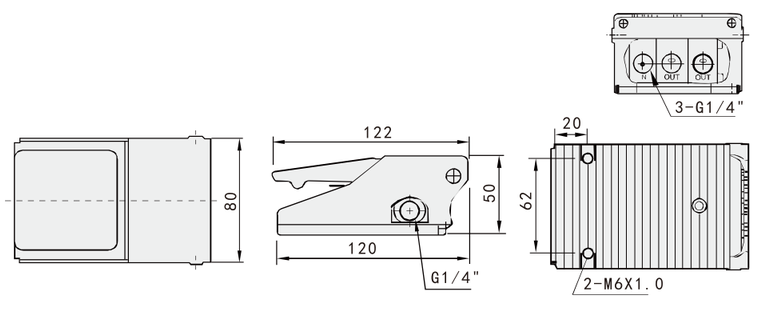

F Series Foot Valve

4F210-08



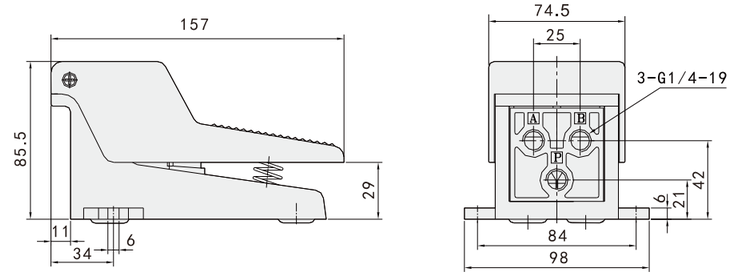

4F210-08L

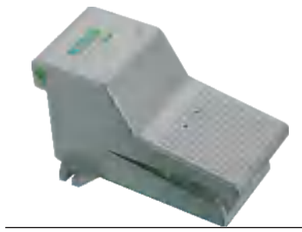

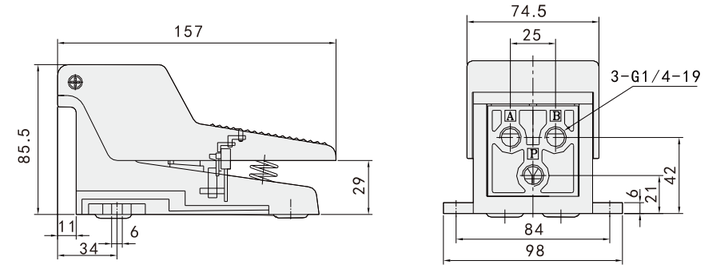

4F210-08C



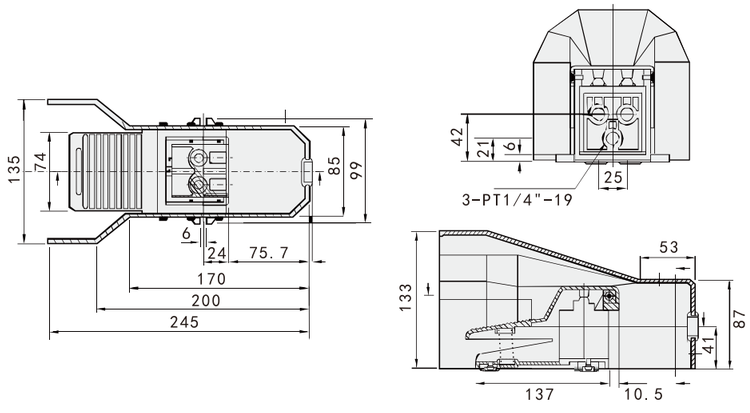

4F210-08LC



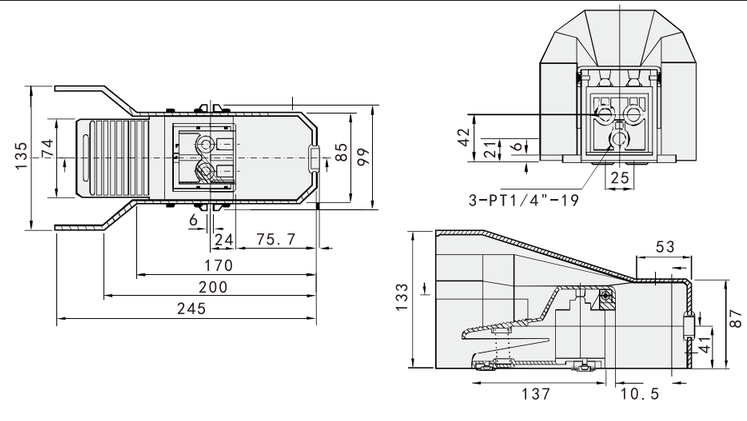

ASC Series One-Way Throttle Valve

Ordering Code ASC Series One-Way Throttle Valve

ASC	200	-	08
Type Code	Series Code		Joint Size
ASC: One-Way Throttle Valve	100:100 Series 200:200 Series 300:300 Series		06:G1/8″ 08:G1/4″ 10:G3/8″ 15:G1/2″



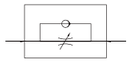

Specifications

Model		ASC100-06	ASC200-08	ASC300-10	ASC300-15
Working Medium		Clean air(40μm Filteration)			
Working Pressure		0~1.0Mpa			
Max.Pressure		1.2Mpa			
Working Temperature		0~60℃			
Body Material		Aluminum			
Standard rated flow	Throttle	200L/min	450L/min	1250L/min	1650L/min
	One way	400L/min	800L/min	1500L/min	2500L/min
Joint Size		G1/8"	G1/4"	G3/8"	G1/2"

Main Dimensions

ASC100、ASC200 Series

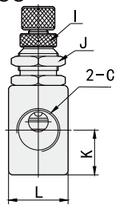

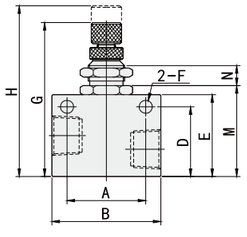

ASC300 Series

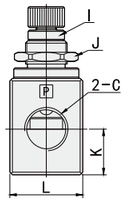

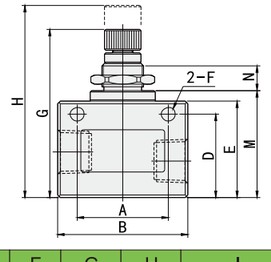

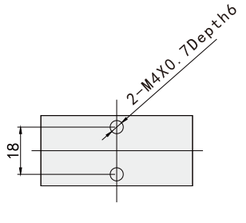

Model	A	B	C	D	E	F	G	H	I	J	K	L	M	N
ASC100-06	22	32	G1/8	18	23	4.3	46.8	52.3	M6X0.5	M12X0.75	10	18	26	8.6
ASC200-08	26	36	G1/4	23	27	4.3	50.8	56.3	M6X0.5	M12X0.75	13.5	18	30	8.6
ASC300-10	35	50	G3/8	32	37	5.3	65	74	M8X0.75	M16X1.0	17.5	28	40.5	10.2
ASC300-15	35	50	G1/2	32	37	5.3	65	74	M8X0.75	M16X1.0	17.5	28	40.5	10.2

AS Series Big Flow Control Valve

Ordering Code AS Series Big Flow Control Valve

AS	2000	-	02
Type Code	Series Code		Joint Size
AS: Big Flow Control Valve	1000:1000 Series 2000:2000 Series 3000:3000 Series 4000:4000 Series		M5:M5 01:G1/8″ 02:G1/4″ 03:G3/8″ 04:G1/2″



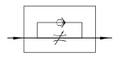

Specifications

Model	AS1000	AS2000	AS3000	AS4000
Working Pressure	1.05Mpa	1.5Mpa		
Max.Pressure	0.7Mpa	1.0Mpa		
Min.Pressure	0.1Mpa	0.05Mpa		
Working Temperature	5~60℃			
Adjustable cycles NO	10	9	8	8

Model	Joint Size	Free Flow		Control Flow	
		Flow (L/min)	Sectional Area	Flow (L/min)	Sectional Area
AS1000-M5	M5	90	1.4	80	1.2
AS2000-01	G1/8"	340	5.2	250	3.8
AS2000-02	G1/4"	340	5.2	250	3.8
AS3000-02	G1/4"	810	12.3	810	12.3
AS3000-03	G3/8"	810	12.3	810	12.3
AS4000-02	G1/4"	1670	25.5	1670	25.5
AS4000-03	G3/8"	1670	25.5	1670	25.5
AS4000-04	G1/2"	1670	25.5	1670	25.5

Note:Orifice is base on input pressure 0.5Mpa.

Main Dimensions

AS1000

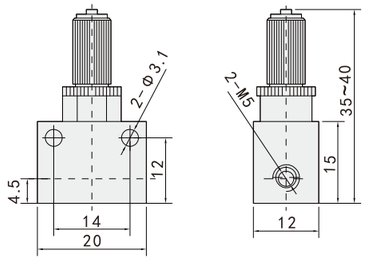

AS4000

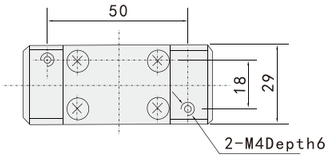

AS2000、AS3000

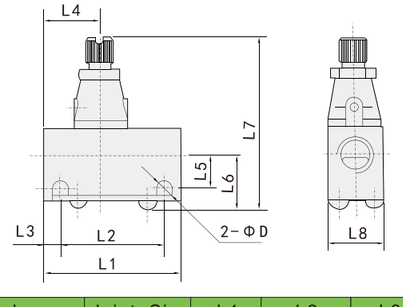

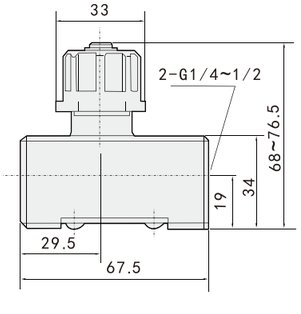

Model	Joint Size	L1	L2	L3	L4	L5	L6	L7	L8	D
AS2000-01	G1/8	40	30	5	17	10	15.5	50~54.5	16	4.5
AS2000-02	G1/4	40	30	5	23	11.5	17	51.5~56	20	4.5
AS3000-02	G1/4	56	45.5	5.25	25	13.2	21	62~69	26	5.5
AS3000-03	G3/8	56	45.5	5.25	25	13.2	21	62~69	26	5.5

Flow Control Valve

Ordering Code — KLA Series Flow Control Valve

K L A - 0 8

- Type Code: KLA: Flow Control Valve
- Joint Size: 06:G1/8″ 08:G1/4″ 10:G3/8″ 15:G1/2″ 20:G3/4″ 25:G1″



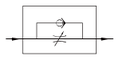

Specifications

Model	KLA-06	KLA-08	KLA-10	KLA-15	KLA-20	KLA-25
Working Medium	Clean air(40μm Filteration)					
Working Pressure	0~0.95Mpa					
Max.Pressure	1.2Mpa					
Working Temperature	0~60℃					
Joint Size	G1/8"	G1/4"	G3/8"	G1/2"	G3/4"	G1"

Main Dimensions

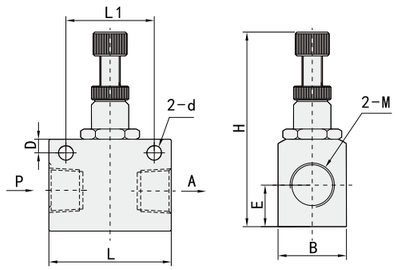

Model	Orifice	L	L1	H	B	M	E	D	Φd
KLA-06	6	40	30	61~70	20	M10X1.0(G1/8)	16	5	4.2
KLA-08	8	40	30	61~70	20	M12X1.25(G1/4)	16	5	4.2
KLA-10	10	50	38	79~88	25	M16X1.5(G3/8)	19.5	6	5
KLA-15	15	50	46	88~102	28	M20X1.5(G1/2)	25	7.5	7.2
KLA-20	20	65	45	105~114	35	M27X2.0(G3/4)	29	9	7
KLA-25	25	65	45	105~114	44	M33X2(G1)	29	9	7

Flow Control Valve

Ordering Code — RE Series Flow Control Valve

R E - 0 2

- Type Code: RE: Flow Control Valve
- Joint Size: 01:G1/8″ 02:G1/4″ 03:G3/8″ 04:G1/2″



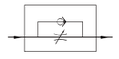

Specifications

Model	RE-01	RE-02	RE-03	RE-04
Working Medium	Clean air(40μm Filteration)			
Acting Type	External Control			
Lubrication	No			
Working Pressure	0~1.0Mpa			
Max. Pressure	1.2Mpa			
Working Temperature	0~60℃			
Joint Size	G1/8"	G1/4"	G3/8"	G1/2"

Main Dimensions

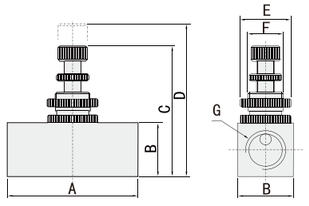

Model	A	B	C	D	E	F	G
RE-01	45	19	43	50	Φ19	M14X1	G1/8
RE-02	45	19	43	50	Φ19	M14X1	G1/4
RE-03	55	25	55	62	Φ25	M18X1	G3/8
RE-04	55	25	55	62	Φ25	M18X1	G1/2

Shuttle Valve

Ordering Code — VS Series Shuttle Valve

V S - 0 8

- Type Code: VS: Shuttle Valve
- Joint Size: 06:G1/8″ 08:G1/4″ 10:G3/8″ 15:G1/2″ 20:G3/4″ 25:G1″



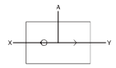

Specifications

Model	VS-06	VS-08	VS-10	VS-15	VS-20	VS-25
Working Medium	Clean air(40μm Filteration)					
Acting Type	External Control					
Working Pressure	0.05~1.0Mpa					
Max.Pressure	1.2Mpa					
Working Temperature	-5~60℃					
Joint Size	G1/8"	G1/4"	G3/8"	G1/2"	G3/4"	G1"

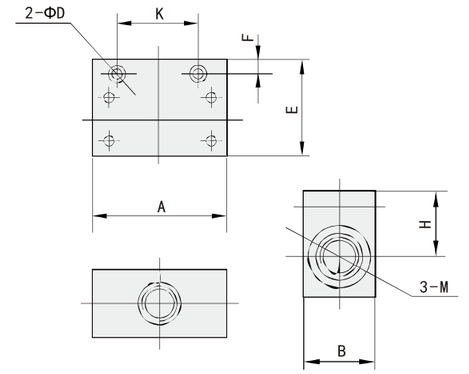

Main Dimensions

Model	A	K	B	E	H	F	D	Thread
VS-06	52	36	25	42	28	9	4.8	M10X1(G1/8)
VS-08	52	36	25	42	28	9	4.8	M12X1.25(G1/4)
VS-10	70	48	36	52	34	10	7	M16X1.5(G3/8)

Model	A	K	B	E	H	F	D	Thread
VS-15	70	48	36	52	34	10	7	M20X1.5(G1/2)
VS-20	110	72	55	76	49	12	7	M27X2(G3/4)
VS-25	110	72	55	76	49	12	7	M33X2(G1)

Slide Valve

Ordering Code — HSV Series Slide Valve

H S V - 0 8 - M M

- Type Code: HSV: Slide Valve
- Joint Size: 06:G1/8″ 08:G1/4″ 10:G3/8″ 15:G1/2″ 20:G3/4″ 25:G1″
- Thread: Blank:Standard MM:Double male thread FF: Double female thread MF:Male&female thread

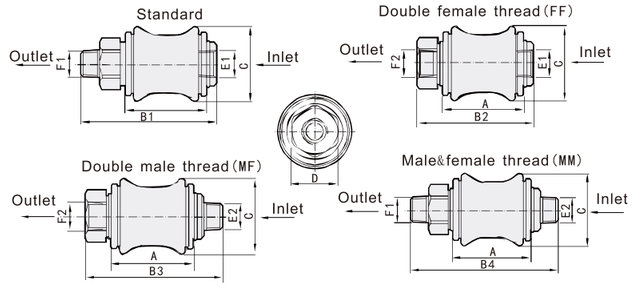





Model	A	B1	B2	B3	B4	C
HSV-06	30	50	43	50	57	27.5
HSV-08	32.5	58	47	58	69	30
HSV-10	39	68.5	55.5	68.5	81.5	35.5
HSV-15	50	85.5	70.5	85.5	100.5	44
HSV-20	58	96.5	79.5	96.5	113.5	53.5
HSV-25	70	114.5	96.5	114.5	132.5	65.5

Modle	D	E1	E2	F1	F2
HSV-06	17	G1/8"	G1/8"	G1/8"	G1/8"
HSV-08	19	G1/4"	G1/4"	G1/4"	G1/4"
HSV-10	22	G3/8"	G3/8"	G3/8"	G3/8"
HSV-15	30	G1/2"	G1/2"	G1/2"	G1/2"
HSV-20	36	G3/4"	G3/4"	G3/4"	G3/4"
HSV-25	43	G1"	G1"	G1"	G1"

One Way Valve

Ordering Code — VA Series One Way Valve

VA - 08

- VA: Type Code — VA: One Way Valve
- 08: Joint Size — 06:G1/8″ 08:G1/4″ 10:G3/8″ 15:G1/2″ 20:G3/4″ 25:G1″ 32:G1-1/4″ 40:G1-1/2″ 50:G2″



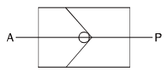

Specifications

Model	VA-06	VA-08	VA-10	VA-15	VA-20	VA-25	VA-32	VA-40	VA-50
Medium	Clean air(40μm Filteration)								
Pressure	0.05~0.8Mpa								
Max.Pressure	1.2Mpa								
Temperature	0~55℃								
Joint Size	G1/8″	G1/4″	G3/8″	G1/2″	G3/4″	G1″	G1-1/4″	G1-1/2″	G2″

Model	D	D1	D2
VA-06	M10X1 G1/8	Φ13	Φ25
VA-08	M12X1.5 G1/4	Φ16	Φ25
VA-10	M16X1.5 G3/8	Φ20	Φ38
VA-15	M20X1.5 G1/2	Φ26	Φ38
VA-20	M27X2 G3/4	Φ32	Φ50
VA-25	M48X2 G1	Φ40	Φ50
VA-32	M33X2 G1-1/4	Φ48	Φ88
VA-40	M42X2 G1-1/2	Φ54	Φ88
VA-50	M60X2 G2	Φ70	Φ115

Main Dimensions

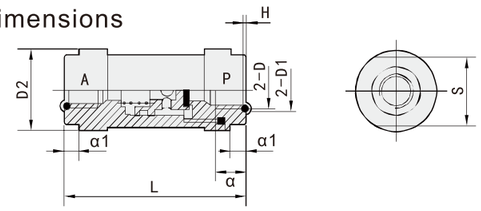

Model	S	L	α	α1	H
VA-06	24	64	10	6	$1.4^{0}_{-0.1}$
VA-08	24	64	12	6	$1.4^{0}_{-0.1}$
VA-10	36	86	14	8	$1.8^{0}_{-0.1}$
VA-15	36	86	14	8	$1.8^{0}_{-0.1}$
VA-20	46	112	21	10	$1.8^{0}_{-0.1}$
VA-25	46	112	23	10	$2.7^{0}_{-0.12}$
VA-32	75	161	25	18	$2.7^{0}_{-0.12}$
VA-40	75	161	26	18	$2.7^{0}_{-0.12}$
VA-50	90	200	26	26	$4.5^{0}_{-0.18}$

One Way Valve

Ordering Code — VAM Series One Way Valve

VAM - 08

- VAM: Type Code — VAM: One Way Valve
- 08: Joint Size — M5:M5 06:G1/8″ 08:G1/4″ 10:G3/8″ 15:G1/2″



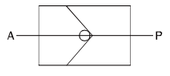

Specifications

Model	VAM-M5	VAM-06	VAM-08	VAM-10	VAM-15
Medium	Clean air(40μm Filteration)				
Temperature	0~60℃				
Pressure	0.05~1.2Mpa				
Flow(mm^2/s)	4	10	20	40	60
Leakage(cm^3/min)	⩽30	⩽45	⩽60	⩽80	⩽95
Joint Size	M5	G1/8″	G1/4″	G3/8″	G1/2″

Main Dimensions

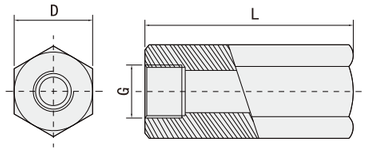

Model	G	L	D
VAM-M5	M5	21	10
VAM-06	G1/8″	37	14
VAM-08	G1/4″	48	17
VAM-10	G3/8″	50	21
VAM-15	G1/2″	60	24

Quick Exhausting Valve

Ordering Code — VKP Series Quick Exhausting Valve

VKP - 08

- VKP: Type Code — VKP: Quick Exhausting Valve
- 08: Joint Size — 06:G1/8″ 08:G1/4″ 10:G3/8″ 15:G1/2″



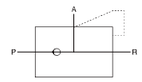

Specifications

Model	VKP-06	VKP-08	VKP-10	VKP-15
Medium	Clean air(40μm Filteration)			
Acting Type	External Lead			
Pressure	0.15~1.0Mpa			
Max.Pressure	1.2Mpa			
Temperature	-5~60℃			
Joint Size	G1/8"	G1/4"	G3/8"	G1/2"

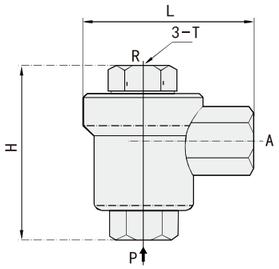

Main Dimensions

Model	T	H	L
VKP-06	G1/8"	39	32
VKP-08	G1/4"	42.5	37.5
VKP-10	G3/8"	50	45
VKP-15	G1/2"	65.5	54

Quick Exhausting Valve

Ordering Code — VQE Series Quick Exhausting Valve

VQE - 02

- VQE: Type Code — VQE: Quick Exhausting Valve
- 02: Joint Size — 01:G1/8″ 02:G1/4″ 03:G3/8″ 04:G1/2″ 06:G3/4″



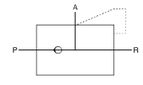

Specifications

Model	VQE-01	VQE-02	VQE-03	VQE-04	VQE-06
Medium	Clean air(40μm Filteration)				
Material	Aluminum				
Temperature	0~60℃				
Pressure	0.05~0.9Mpa				

Model	VQE-01	VQE-02	VQE-03	VQE-04	VQE-06
Max.Pressure	1.0Mpa				
Sectional Area	16mm^2	27mm^2	28mm^2	71mm^2	73mm^2
Max.Flow(l/min)	886	1823	2300	3000	3848
Joint Size	G1/8″	G1/4″	G3/8″	G1/2″	G3/4″

Main Dimensions

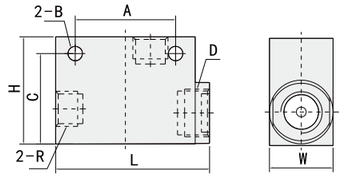

Model	R	L	W	H	A	B	C	D
VQE-01	1/8″	46	19	32	30	Φ4.3	27	G1/4
VQE-02	1/4″	61.5	25.5	38	39	Φ5.6	31.5	G3/8
VQE-03	3/8″	61.5	25.5	38	39	Φ5.6	31.5	G3/8
VQE-04	1/2″	98	38	63.7	60	Φ8.5	50.5	G3/4
VQE-06	3/4″	98	38	63.7	60	Φ8.5	50.5	G3/4