VPCE Series High Pressure Solenoid Valve

Ordering Code VPCE Series High Pressure Solenoid Valve

VPCE 008 - 13L □ AC220V

- VPCE — Type Code: VPCE High Pressure Solenoid Valve
- 008 — Joint Size: 008:1/4″ 010:3/8″ 015:1/2″ 020:3/4″ 025:1″
- 13L — Orifice: 13L:13mm 15L:15mm 20L:20mm 23L:23mm 25L:25mm
- □ — Valve Body: Blank:Brass S:SS316
- AC220V — Standard Voltage: AC220V 50/60Hz DC24V



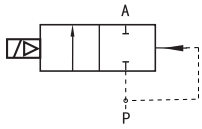

Specifications

Model	Orifice	Joint Size	Working Pressure	KV Value	Ambient Temp	Working Temp
VPCE008-13L	13mm	G1/4"	0.1-5.0Mpa	2.52m³/h	-10~50°C	-10~80°C
VPCE008-15L	15mm	G1/4"	0.1-5.0Mpa	2.8m³/h		
VPCE010-13L	13mm	G3/8"	0.1-5.0Mpa	2.52m³/h		
VPCE010-15L	15mm	G3/8"	0.1-5.0Mpa	2.8m³/h		
VPCE015-13L	13mm	G1/2"	0.1-5.0Mpa	2.52m³/h		
VPCE015-15L	15mm	G1/2"	0.1-5.0Mpa	2.8m³/h		
VPCE020-15L	15mm	G3/4"	0.1-5.0Mpa	2.8m³/h		
VPCE020-20L	20mm	G3/4"	0.1-4.0Mpa	5.0m³/h		
VPCE020-23L	23mm	G3/4"	0.1-4.0Mpa	7.1m³/h		
VPCE025-23L	23mm	G1"	0.1-4.0Mpa	7.1m³/h		
VPCE025-25L	25mm	G1"	0.1-4.0Mpa	8.5m³/h		

Main Specification

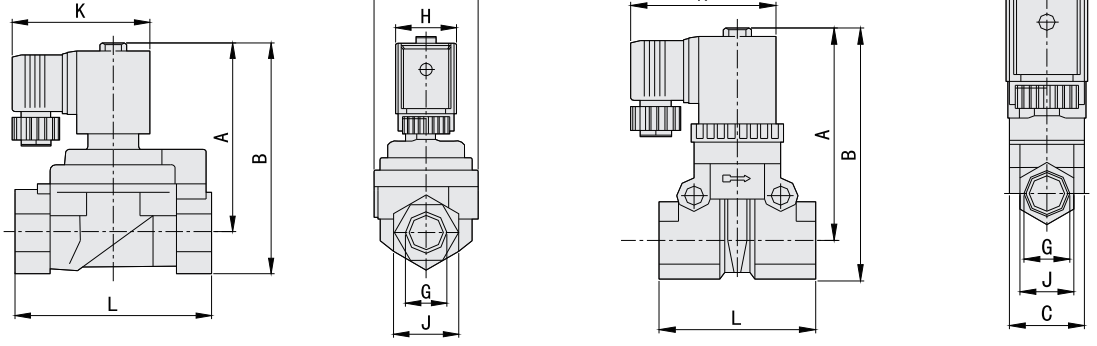

Model	G	L	K	A	B	C	H	J
VPCE008-13L	G1/4″	71	76	83	97	32	36	27
VPCE008-15L	G1/4″	77	76	91	106	53	36	27
VPCE010-13L	G3/8″	71	76	83	97	32	36	27
VPCE010-15L	G3/8″	77	76	91	106	53	36	27
VPCE015-13L	G1/2″	71	76	83	97	32	36	27
VPCE015-15L	G1/2″	77	76	91	106	53	36	27
VPCE020-15L	G3/4″	66	76	77/97	91/111	44	36	26
VPCE020-20L	G3/4″	91	76	100	116	57	36	32
VPCE020-23L	G3/4″	100	76	90	113	70	36	40
VPCE025-23L	G1″	100	76	90	113	70	36	40
VPCE025-25L	G1″	117	76	106	123	71	36	41